TRANSPORTATION IMPACT FEE PROGRAM

March 2013

TABLE OF CONTENTS

SECTION 1.0 INTRODUCTION....1
1.1 BACKGROUND....2
1.2 TRANSPORTATION DEVELOPMENT IMPACT FEES (TDIF)....3
SECTION 2.0 ANALYSIS AND FEE METHODOLOGY....4
2.1 RTCIP NEXUS STUDY....5
2.2 APPROACH....5
2.3 GROWTH PROJECTIONS....6
2.4 FACILITIES STANDARD AND NEED FOR TRANSPORTATION IMPROVEMENTS....11
2.5 FACILITY COSTS AND AVAILABLE FUNDING....12
2.6 COST ALLOCATION AND FEE CALCULATIONS....13
SECTION 3.0 PROGRAM FACILITIES AND COST ESTIMATES....17
3.1 PROGRAM FACILITIES....18
3.2 PROJECT COST ESTIMATES....18
SECTION 4.0 FEE SUMMARY....35
4.1 FEE SCHEDULE....36
4.2 DEVELOPMENT FORECAST....36
4.3 TDIF REVENUES....37
SECTION 5.0 PROGRAM ADMINISTRATION AND FEE REQUIREMENTS....39
5.1 FEE COLLECTION AND USE OF REVENUES....40
5.2 ANNUAL FEE ADJUSMENTS....41
5.3 EXEMPTIONS....42
5.4 REIMBURSEMENT AGREEMENTS....43
5.5 FEE WAIVERS, REDUCTIONS AND REFUND OF FEE....43
ATTACHMENT A RTCIP IMPACT FEE NEXUS STUDY

LIST OF TABLES

TABLE 1 – POPULATION, EMPLOYMENT AND LAND USE FORECASTS....7
TABLE 2 – OCCUPANT DENSITY....8
TABLE 3 – TRAVEL DEMAND FACTORS....9
TABLE 4 – ALLOCATION OF TAXABLE RETAIL SPENDING AND COMMERCIAL SQUARE FOOTAGE IN SAN DIEGO COUNTY....10
TABLE 5 – TRAVEL DEMAND FROM EXISTING AND NEW DEVELOPMENT....11
TABLE 6 – REGIONAL ARTERIAL SYSTEM ROADWAY STATISTICS....12
TABLE 7 – ESTIMATED ARTERIAL SYSTEM CAPACITY INVESTMENTS ($2008)....14
TABLE 8 – RTP INVESTMENT PLAN, 2002-2030 ($2002)....14
TABLE 9 – TIF PROGRAM FACILITY COST ESTIMATE SUMMARY....15
TABLE 10 – RESIDENTIAL COST PER TRIP (ESTIMATED FOR $2008)....16
TABLE 11 – RTCIP IMPACT FEE (ESTIMATED FOR $2008)....16
TABLE 12 – TIF PROGRAM FACILITY LIST....18
TABLE 13 – TIF PROGRAM FACILITY COST ESTIMATES AND ANTICIPATED REVENUES....19
TABLE 14A – TDIF SCHEDULE (RESIDENTIAL)....36
TABLE 14B – TDIF SCHEDULE (NON-RESIDENTIAL)....36
TABLE 15 – DEVELOPMENT FORECAST....37
TABLE 16 – TDIF REVENUES....38

SECTION 1.0

INTRODUCTION

1.1 BACKGROUND

Regional Transportation Congestion Improvement Program (RTCIP)
In November 2004, San Diego County voters approved local Proposition A extending the TransNet ½ cent sales tax to fund the region's transportation system for 40 years. The draft 2007 Regional Transportation Plan (RTP) details the need for $58 billion in transportation improvements. Of that total, $27 billion in funding will come from a variety of state and federal sources. The remaining $31 billion will come from local funding sources including the TransNet sales tax extension (which will generate approximately $8 billion). As part of Proposition A and the TransNet Extension Ordinance, the Regional Transportation Congestion Improvement Program (RTCIP) was created to ensure that new development directly invests in the region's transportation system to offset the negative impacts of growth on congestion and mobility.

Key components of the RTCIP include:

- Beginning July 1, 2008 each local agency must contribute $2,000 from exactions imposed on the private sector for each new residence constructed within their jurisdiction.
- The $2,000 fee per new residential unit will be updated annually by SANDAG for cost inflation following initial adoption by local agencies.
- Development impact fees may be used as a revenue source to satisfy local agency contributions to the RTCIP. Fees would be imposed on new dwelling units at building permit issuance.
- Revenues must be expended on improvements to the Regional Arterial System and in a manner consistent with the expenditure priorities in the most recent adopted Regional Transportation Plan (RTP).
- The Independent Taxpayer Oversight Committee (ITOC), created for the TransNet program, is responsible for reviewing local agency implementation of the RTCIP.
- If a local agency does not comply with the RTCIP the agency can lose TransNet sales tax funding.

Cities have the authority to impose impact fees under the *Mitigation Fee Act* contained in California Government Code sections 66000 through 66025. Each local agency is required to make findings demonstrating a reasonable nexus between: a) the collection of fees, b) the need for facilities created by new development, and c) the expenditure of fee revenues to benefit new development.

Regional Arterial System
The San Diego Association of Governments (SANDAG) has established a Regional Arterial System (RAS) comprised of a select group of arterial roadways which provide "critical links" or direct connections between communities, ensuring system continuity and congestion relief in high volume corridors. The current RAS system (as of 2002)

contains 2,805 lane miles throughout San Diego County. Based on analysis of existing average weekday vehicle hours of delay on the RAS and future delay based on new development, SANDAG has estimated that an additional 637 lane miles are needed to minimize congestion. SANDAG uses the following criteria for determining whether or not an arterial should be included in the RAS:

- Provides a link to areas with high concentrations of existing or future population employment
- Provides a link to activity centers such as hospitals, retail centers, entertainment centers, hotels, colleges, and universities
- Accommodates high future traffic volumes
- Accommodates Regional Transit Vision
- Provides access to intermodal (freight, port, military, or airport) facilities.

The adopted Regional Transportation Plan (RTP) allocates $500 million for investment in the Regional Arterial System (RAS), resulting in a shortfall of over $6 billion. As such, the RTP indicates that local jurisdictions need to identify matching funds for investment in the RAS because the regional funding provided through the RTP, "…is intended to be matched with revenues from the local jurisdictions, which are responsible for improving regional roadways and local streets to meet their residents needs and mitigate the effects of local land use developments." The following Regional Arterial System (RAS) roadways are located within the City of National City:

- Harbor Drive
- National City Boulevard
- Plaza Boulevard
- Euclid Avenue
- 30th Street

1.2 TRANSPORTATION DEVELOPMENT IMPACT FEES (TDIF)

Transportation Development Impact Fees (TDIF) are typically imposed by local agencies to mitigate "cumulative" impacts on the local transportation network due to increased traffic and delay caused by new development. Cumulative impacts are related to overall development (a combination of local projects and regional growth) in a geographic region or plan area, rather than "direct" or site-specific impacts caused solely by an individual project. When traffic from an individual project contributes to a cumulative impact, that project is required to contribute a "fair share" towards the cost of improvements. TDIFs assist in determining that fair share amount, typically by defining a cost per trip which can be applied to the project based on the project's land use category, size and applicable trip generation rate, and the costs associated with the new or expanded transportation facilities needed to mitigate the impact.

SECTION 2.0

ANALYSIS AND FEE METHODOLOGY

2.1 RTCIP NEXUS STUDY

San Diego Association of Governments (SANDAG) policy as expressed through the TransNet Extension Ordinance and Expenditure Plan is that new development shall contribute towards Regional Arterial System (RAS) improvements through the Regional Transportation Congestion Improvement Program (RTCIP). SANDAG coordinated a regional nexus study to assist local agencies in San Diego County in their efforts to adopt a transportation impact fee to fulfill their contribution to the RTCIP, while satisfying the requirements of the California *Mitigation Fee Act* (contained in California Government Code sections 66000 through 66025). The study titled, *RTCIP Impact Fee Nexus Study – Final Report* was prepared on November 26, 2007 by MuniFinancial (Oakland, CA office), under the supervision of SANDAG.

The nexus analysis documents a reasonable relationship between increased travel demand from new development on the Regional Arterial System (RAS), the cost of RAS improvements needed to accommodate that growth, and an impact fee to fund those investments. Five arterials within the City of National City are included as part of the RAS. As such, the City of National City has chosen to use the nexus analysis provided in the *RTCIP Impact Fee Nexus Study* as a means for establishing a Transportation Impact Fee Program to advance a legitimate public interest by enabling both SANDAG and the City of National City to fund improvements to transportation infrastructure required to accommodate new development. Much of the language provided in the following subsections of *Section 2.0* is taken directly from the *RTCIP Impact Fee Nexus Study*. The entire nexus study is included as *Attachment A* of this TIF Program report.

2.2 APPROACH

Impact fees are calculated to fund the cost of facilities required to accommodate growth. The following four steps, which are described in detail in the subsections that follow, are commonly used to prepare a development impact fee study:

1) Prepare growth projections
2) Identify facility standards
3) Determine the amount and cost of facilities required to accommodate new development based on facility standards and growth projections
4) Calculate the public facilities fee by allocating the total cost of facilities per unit of development.

The methodology for the nexus analysis assumes that all development, existing and new has the same impact on the need for transportation system improvements based on the amount of travel demand generated (vehicle trips). Thus, existing and new development should share proportionately in the cost of transportation system improvements. For descriptive purposes this can be considered an “average cost” approach.

The approach when applied to the Regional Arterial System (RAS) takes a countywide perspective because the RAS represents a countywide network that facilitates mobility between and through cities and unincorporated areas. New development, regardless of location, both adds congestion (increased vehicle trips) to a range of arterials within the RAS and benefits from the expenditure of fee revenue on a range of RAS facilities.

2.3 GROWTH PROJECTIONS

This section describes the SANDAG forecast for population and employment, and estimates of land use in terms of dwelling units and nonresidential building square feet. Land use forecasts are converted to vehicle trips to provide a measure of travel demand.

Population, Employment and Land Use

The planning horizon for this analysis is 2030, consistent with current land use and transportation forecasts adopted by SANDAG. The nexus analysis uses forecasts of dwelling units and employment to estimate new development demand for transportation improvements. Forecasts for 2030 are from SANDAG's Urban Development Model (UDM). The UDM is one of four interrelated forecasting models used by SANDAG to project land use and transportation for the region. The UDM allocates changes in the region's economic and demographic characteristics to jurisdictions and other geographic areas within the region. The model is based on the spatial interrelationships among economic factors, housing and population factors, land use patterns, and the transportation system. The model generates 2030 forecasts for small geographic areas including the traffic analysis zones used in the transportation modeling process. The UDM complies with federal mandates that transportation plans consider the long-range effects of the interaction between land uses and the transportation system.

The initial SANDAG fee calculation (see *Attachment A*) used 2002 as the base year for cost estimates so that is the base year used for this nexus analysis. Dwelling units and employment for 2002 are based on interpolations of development estimates for 2000 and 2005 from the UDM. Total employment was allocated to land use categories based on analysis of employment by land use using data from five counties and conducted for the Southern California Association of Governments (SCAG).

Table 1 lists the 2002 and 2030 land use assumptions based on SANDAG forecasts and used in the nexus analysis. The land use categories shown in **Table 1** and used in this nexus analysis are the same that are used in the SANDAG forecasts with one exception. This nexus analysis includes mobile homes in the multi-family category because of the minimal amount of forecast mobile home development. SANDAG forecasts mobile homes to increase by 2,000 units countywide during the planning horizon, or 1.3 percent of forecast growth in multi-family units.

The employment forecasts are converted to building square footage by land use as shown in **Table 1** using occupant densities factors shown in **Table 2**. These factors are derived from a study of employment, building square footage, and land use conducted for SCAG. The density factors were derived from a random sample of 2,721 parcels drawn from

across five counties (Los Angeles, Orange, Riverside, San Bernardino, and Ventura). This type of study was not available for San Diego County. The SCAG study's density factors are based on a large sample of properties and are used in development impact fee studies throughout the State of California.

Table 1 – Population, Employment and Land Use Forecasts

	2002	2030	Increase	Percent
Residents	2,909,000	3,855,000	946,000	33%
Dwelling Units				
Single Family	648,000	778,000	130,000	20%
Multi-family[1]	419,000	576,000	157,000	37%
Total	1,067,000	1,354,000	287,000	27%
Employment[2]				
Retail	295,000	393,000	98,000	33%
Office/Services	348,000	451,000	103,000	30%
Industrial	383,000	628,000	245,000	64%
Subtotal	1,026,000	1,472,000	446,000	43%
Residential[3]	138,000	149,000	11,000	8%
Public[4]	139,000	157,000	29,000	21%
Total	1,303,000	1,778,000	475,000	36%
Building Square Feet (000s)[5]				
Retail	148,000	197,000	49,000	33%
Office/Services	104,000	135,000	31,000	30%
Industrial	345,000	565,000	220,000	64%
Total	597,000	897,000	300,000	50%

[1] Multi-family population includes mobile homes.

[2] Based on Series 10 forecast data provided by SANDAG. Estimates by major land use type rolled up from County Assessor's categories. Interpolated 2008 data based on 2005 and 2010 forecasts.

[3] Employment on residential land uses such as home-based businesses. Travel demand included in estimates for residential land uses.

[4] Travel demand caused by public land uses so excluded from nexus analysis.

[5] Based on occupant density factors shown in Table 2.

Sources: San Diego Association of Governments (SANDAG) Data Warehouse (http:datawarehouse.sandag. org). SANDAG Series 10 forecast of employment by land use; MuniFinancial.

Table 2 – Occupant Density

Land Use		
Commercial	500	Square feet per employee
Office/Services	300	Square feet per employee
Industrial[1]	900	Square feet per employee

Note: Source data based on random sample of 2,721 developed parcels across five Los Angeles area counties (Los Angeles, Orange, Riverside, San Bernardino, and Ventura). MuniFinancial estimated weighting factors by land use categories used in the survey to calculate average employment densities by major category (commercial, office, industrial).

[1] Adjusted to correct for over-sampling of industrial parcels in Ventura County.

Source: The Natelson Company, Inc., *Employment Density Study Summary Report,* prepared for the Southern California Association of Governments; October 31, 2001, Table 2-A, p. 15. MuniFinancial.

Travel Demand by Land Use Category

To estimate travel demand by type of land use the nexus study uses vehicle trips. Vehicle trips can be calculated in a consistent manner across land use categories based on population and employment estimates by land use category. This enables the impact of development to be distinguished between land use categories, a key requirement of the *Mitigation Fee Act*.

A reasonable measure of vehicle trips is weekday average daily vehicle trips ends. Because automobiles are the predominant source of traffic congestion, vehicle trips are a reasonable measure of demand for new capacity even though the measure excludes demand for alternative modes of transportation (transit, bicycle, pedestrian). The following two adjustments are made to vehicle trip generation rates to better estimate travel demand by type of land use:

- Pass-by trips are deducted from the trip generation rate. Pass-by trips are intermediates stops between an origin and a final destination that require no diversion from the route, such as stopping to get gas on the way to work.
- The trip generation rate is weighted by the average length of trips for a specific land use category compared to the average length of all trips on the street system.

Table 3 shows the calculation of travel demand factors by land use category based on the adjustments described above. Data is based on extensive and detailed trip surveys conducted in the San Diego region by SANDAG. The surveys provide a robust database of trip generation rates, pass-by trips factors, and average trip length for a wide range of land uses.

Table 3 – Travel Demand Factors

	A	B	C = A + B	D	E = C x D / 6.9	F	G = E x F
	Trip Rate Adjustment Factor						
	Primary Trips[1]	Diverted Trips[1]	Total Excluding Pass-by[1]	Average Trip Length[2]	Adjust-ment Factor[3]	Average Daily Trip Ends[4]	Travel Demand Factor[4]
Residential[6]							
Single Family	86%	11%	97%	7.9	1.11	10	11.10
Multi-family[5]	86%	11%	97%	7.9	1.11	8	8.88
Nonresidential[7]							
Commercial	47%	31%	78%	3.6	0.41	68	27.88
Office/Services	77%	19%	96%	8.8	1.22	20	24.40
Industrial	79%	19%	98%	9.0	1.28	8	10.24

[1] Percent of total trips. Primary trips are trips with no midway stops, or "links". Diverted trips are linked trips whose distance adds at least one mile to the primary trip. Pass-by trips are links that do not add more than one mile to the total trip.
[2] In miles.
[3] Systemwide average trip length is 6.9 miles.
[4] Trip ends or travel demand per dwelling unit or per 1,000 building square feet.
[5] Single family based on 3-6 units per acre category. Multi-family based on 6-20 units per acre category.
[6] Multi-family deman factos include mobile homes. The combined average daily trip ends calculation multiplies 2002 population by average daily trip ends for both multi-family and mobile homes and then weights the sum by the 2002 population.
[7] Commercial based on "community shopping center" category. Office/services based on "standard commercial office" category. Industrial based on "industrial park (no commercial)" category.

Sources: San Diego Association of Governments, *Brief Guide of Vehicular Traffic Generation Rates for the San Diego Region*, July 1998;

Shifting Burden of Commercial Development to Residential Development

Applying the travel demand factors shown in **Table 3** directly to development by land use category implicitly assumes that the cause of each vehicle trip on the transportation network is shared equally by the land use at each trip end (origin and destination). But depending on the regional economic forces affecting development in a particular area, the cause of a trip may be related more to the land use at the origin or the destination. For example, in some areas residential development may be caused by job growth, while in other areas the opposite may occur (jobs follow housing). These cause and effect relationships may change over time in the same area. Given the complexity of these regional economic and land use relationships, many transportation impact fee nexus studies make the simplifying but reasonable assumption to weight the origin and destination of a trip equally when identifying the cause of travel demand on a transportation system.

However, there is one regional economic and land use cause and effect relationship that remains consistent across geographical areas and over time. Commercial development is to a large extent caused by the spending patterns of local residents. Commercial development follows residential development or anticipates new development occurring in the near term. This development pattern can be observed throughout metropolitan regions and is driven by the site location process followed by retailers. When seeking new locations, the most common measure of a potential market used by site location analysts is the number of households within a reasonable driving distance for shopping trips and the median income of those households.

Given this consistent regional economic and land use cause and effect relationship, it is reasonable to allocate at least some of the burden of commercial trip ends to residential development. This approach is used in impact fee nexus studies to more accurately allocate the burden of transportation improvements needed to accommodate growth.

Not all retail spending is related to local residential development. There are three primary sources of retail spending:

1) Local households
2) Local businesses
3) Visitors that travel to the area to shop.

An analysis of taxable retail sales data for 2004, the most recent complete year of data available from the State Board of Equalization, was used to determine the amount of commercial development associated with residential development (see *Attachment A*). The analysis calculated the total spending potential of San Diego County households and estimated what portion of that spending occurred within the County. The result was that 62.6 percent of total taxable retail sales was estimated to be associated with local household spending. The remainder was associated with local business and visitor spending. Based on this analysis, residential development directly causes 62.6 percent of commercial development. Consequently, the travel demand associated with that share of commercial development is shifted to residential development. The results of this analysis are summarized in **Table 4**.

Total Travel Demand by Land Use Category

Table 5 shows estimates of travel demand from existing and new development and the shares that residential and nonresidential development comprise of the total. Travel demand is based on the travel demand factors calculated in **Table 3** and the growth estimates in **Table 1**. Commercial development associated with local household spending as shown in **Table 4** is included in the residential land use category. Based on this analysis, new residential development will represent about 13 percent of total travel demand in 2030.

Table 4 – Allocation of Taxable Retail Spending and Commercial Square Footage in San Diego County

	Taxable Retail Sales (2004)	Share	Building Square Feet 2002	2025	Growth
Total Taxable Retail Spending & Commercial Sq. Ft.	$ 44,470,000	100.0%	148,000	197,000	49,000
Local Residential Taxable Spending & Sq. Ft.	27,856,000	62.6%	93,000	123,000	30,000
Local Business and Visitor Taxable Spending & Sq. Ft.	16,614,000	37.4%	55,000	74,000	19,000

Sources: Tables 1 and B.4; MuniFinancial.

Table 5 – Travel Demand from Existing and New Development

Land Use Category	Travel Demand Factor[1]	Development: Existing[2] (2002)	Development: Growth[2] (2002-2030)	Travel Demand[3]: Existing (2002)	Travel Demand[3]: Growth (2002-2030)	Total
Residential						
Single Family	11.10	648,000	130,000	7,193,000	1,443,000	8,636,000
Multi-family[4]	8.88	419,000	157,000	3,721,000	1,394,000	5,115,000
Local-serving Commercial[5]	27.88	93,000	30,000	2,593,000	836,000	3,429,000
Subtotal		1,160,000	317,000	13,507,000	3,673,000	17,180,000
Percent of Total				47.7%	13.0%	60.7%
Nonresidential						
Other Commercial[6]	27.88	55,000	19,000	1,533,000	530,000	2,063,000
Office/Services	24.40	104,000	31,000	2,538,000	756,000	3,294,000
Industrial	10.24	345,000	220,000	3,533,000	2,253,000	5,786,000
Subtotal		1,757,000	617,000	7,604,000	3,539,000	11,143,000
Percent of Total				26.8%	12.5%	39.3%
Total				21,111,001	7,212,000	28,323,000
Percent of Total				75.0%	25.0%	100.0%

[1] Per dwelling unit for residential land uses and per 1,000 square feet for nonresidential land uses.
[2] Dwelling units for residential land uses and 1,000 square feet for nonresidential land uses.
[3] Estimated total trip ends adjusted for the factors shown in Table 3.
[4] The multi-family travel demand factor and demand calculations include mobile homes.
[5] Represents share of total commercial square feet and travel demand associated with spending by San Diego County households.
[6] Represents share of total commercial square feet and travel demand associated with spending by San Diego County businesses and visitors.

Source: Tables 1, 3 and 4; MuniFinancial.

2.4 FACILITIES STANDARD AND NEED FOR TRANSPORTATION IMPROVEMENTS

The facility standard determines new development's need for new facilities. The facility standard is also used to evaluate the existing level of facilities to ensure that new development does not fund infrastructure needed to serve existing development. The facility standard used by this nexus analysis is average weekday vehicle hours of delay on the Regional Arterial System (RAS) in 2008. Hours of delay provide a reasonable system-wide measure of the impact of new development on congestion and mobility. SANDAG's transportation forecasting model (TransCAD) demonstrates that hours of delay increase with the level of new development, and decrease with investment in additional transportation system capacity. Projected hours of delay in 2002 is used for the standard because that is the implementation date for the RTCIP, representing existing conditions at the time new development would begin contributing to transportation system improvements.

The data in **Table 6** from the TransCAD model demonstrates a reasonable relationship between new development and the need for additional investment in the RAS. The table shows the projected increases in vehicle hours of delay from 2002 to 2030 and the benefits of adding 637 lane miles to the RAS. Without any investment in the RAS vehicle hours of delay will increase by 114 percent during this period. With an investment of 637 new lane miles in regional arterials vehicle hours of delay will increase substantially less, by 68 percent.

Table 6 – Regional Arterial System Roadway Statistics

	Existing 2002	Projected 2030 Without Improvements	Projected 2030 With Improvements
Lane Miles	2,805	2,805	3,442
Change, 2002-2030 (amount)		-	637
Change, 2002-2030 (percent)		0%	23%
Average Weekday Vehicle Hours of Delay	64,352	137,481	108,350
Change, 2002-2030 (amount)		73,129	43,998
Change, 2002-2030 (percent)		114%	68%

Note: 2002 data interpolated based on 2000 and 2005 data provided by model output (see Source).

Source: San Diego Association of Governments, TransCAD model output.

New development is not the entire cause of the forecasted increase in vehicle hours of delay. As discussed previously, new development is only allocated a share of RAS investment costs. The SANDAG transportation model assumes that vehicle miles traveled (VMT) per capita for all existing and new development will increase 9.6 percent from 2000 to 2030 continuing recent trends. Thus, some of the increase in vehicle hours of delay is caused by increased travel from existing development. This trend does not affect the nexus analysis under the "average cost" approach taken by this nexus analysis. Under this approach RAS investment costs are allocated proportionately across existing and new development based on total travel demand, thus incorporating the impact of changes in travel behavior such as increased VMT per capita.

2.5 FACILITY COSTS AND AVAILABLE FUNDING

Attachment A details total costs associated with Regional Arterial System (RAS) improvements that are the responsibility of new development, from a countywide perspective, because the RAS represents a countywide network that facilitates mobility between and through cities and unincorporated areas. New development, regardless of location, both adds congestion (increased vehicle trips) to a range of arterials within the RAS and benefits from the expenditure of fee revenue on a range of RAS facilities. *Attachment A* also summarizes the need for RTCIP funding based on available revenues identified in the adopted Regional Transportation Plan (RTP). **Tables 7** and **8** summarize facility investments including RAS capacity investments.

The adopted RTP allocates $500 million for investment in the Regional Arterial System (RAS), resulting in a shortfall of over $6 billion. As such, the RTP indicates that local jurisdictions need to identify matching funds for investment in the RAS because the regional funding provided through the RTP, "…is intended to be matched with revenues from the local jurisdictions, which are responsible for improving regional roadways and local streets to meet their residents needs and mitigate the effects of local land use developments."

Table 9 summarizes the City of National City TIF Program facility improvements and cost estimates. The facility improvements identified in **Table 9** will provide increased roadway capacity necessitated by the cumulative impacts of future development. These improvements are consistent with the adopted General Plan for National City, and are required to maintain acceptable levels of traffic and transportation service. Further studies, including environmental review, may show superior alternative facilities that also provide the needed increased capacity. Once such studies are completed, fees collected under the TIF Program may be used to fund those superior alternative facilities. A detailed summary of program facility cost estimates and anticipated revenue sources is provided in *Section 3.0* of this report.

The absence of contiguity of the facility improvements to individual development parcels is not essential, since traffic from any one development can utilize the entire circulation system to access work, schools, commercial centers, residences, and other land uses throughout the City and region. A failure in any one part of the circulation system will have a negative impact on other parts of the system, given the nature of traffic. Conversely, by increasing roadway capacity on one portion of a circulation system, other locations can also experience congestion relief and improved levels of service.

2.6 COST ALLOCATION AND FEE CALCULATIONS

The vehicle trip rates described in *Subsection 2.3* provide a means to allocate a proportionate share of total RAS improvements to each new development project. Trip rates are a reasonable measure of each development project's demand on the regional transportation system. New development's share of total RAS improvements is divided by total trips generated by new development to calculate a cost per trip. The cost per trip multiplied by the trips generated by a development project determines that project's fair share of total RAS improvements.

New development could contribute up to $320 per trip as shown in **Table 10**. This amount is based on the nexus approach taken for this analysis that allocates RAS costs to new residential development based on shares of total travel demand in 2030. This approach is based on allocating to residential development the entire burden of trips associated with commercial development that serves households within the County (see previous discussion in *Subsection 2.3*).

The RTCIP specifies that new residential development must contribute $2,000 per dwelling unit. To test whether the required RTCIP contribution of $2,000 per unit is justified for different types of units, **Table 11** provides a fee summary by major residential land use category based on the calculated RTCIP cost per trip from **Table 10**. The fee ranges from a low of $2,842 for multi-family units to a high of $3,552 for single family units. The average fee per dwelling unit is $3,164. The impact fee required by the RTCIP of $2,000 per residential unit is therefore well below the amount justified under the *Mitigation Fee Act* for major residential land use categories. *Attachment A* also includes RTCIP fee calculations for non-residential development, summarized as follows: $2,704 for commercial, $6,002 for office, and $2,519 for industrial.

Table 7 – Estimated Arterial System Capacity Investments ($2008)

Year	Caltrans Index	Inflation Rate Annual	Inflation Rate Cummulative	Cost
2002	142.2	NA	NA	$ 5,100,000
2003	148.6	4.50%	4.50%	5,330,000
2004	216.2	45.49%	52.04%	7,754,000
2005	268.3	24.10%	88.68%	9,623,000
2006	280.6	4.58%	97.32%	10,063,000
2007[1]	305.7	8.94%	114.96%	10,963,000
Regional Arterial Widenings & Extensions (lane miles) (2002-2030)				637
Total Regional Arterial System Capacity Investments (2002-2030) (Est. $2008)				$ 6,981,238,400

[1] Annual inflation rate for 2007 was estimated using the ten-year compounded annual growth rate from 1996 to 2006 for the CalTrans highway construction annual cost index. The actual rate for 2007 will be updated after the annual index data is published by CalTrans on January 30th of 2008.

Sources: San Diego Association of Governments, *Final 2030 Regional Transportation Plan, Mobility 2030* (February 2005), Technical Appeicix 9 - Project Cost Estimates, p. 159; California Dept. of Transportation, *Price Index for Selected Highway Construction Items* (Second Quarter Ending June 30, 2007); Table 6; MuniFinancial.

Table 8 – RTP Investment Plan, 2002-2030 ($2002)

	$ Millions ($2002)	
Capacity Expansion Investments		
New Transit Facilities	$ 8,500	20%
Managed High Occupancy Vehicle Lane Facilities	7,450	18%
Highway System Completion/Widening Projects	3,580	9%
New Local Streets and Roads	4,430	11%
Regional Significant Arterials	500	1%
Subtotal	$ 24,460	58%
Other Investments[1]	17,485	42%
Total Expenditures	$ 41,945	100%

[1] Includes projects that improve the operations, maintenance, and rehabilitation of highway, road, and transit, and related facilities.

Source: San Diego Association of Governments, *Final 2030 Regional Transportation Plan, Mobility 2030* (February 2005), p. 44; MuniFinancial.

Table 9 – TIF Program Facility Cost Estimate Summary

No.	Project	CIP#	Location	From	To	Description	PE	ROW	Construction	Total
1	Plaza Blvd. Widening*	99-09	Plaza Blvd.	Highland Ave.	Euclid Ave.	Widen arterial from 4 lanes to 6 lanes (~ 1.1 miles)	$1,900,000	$1,600,000	$12,500,000	$16,000,000
* Project is part of the Regional Arterial System (RAS). Improvements are consistent with RTCIP requirements for use of impact fee revenues (see *Section 5.0).*										

Table 10 – Residential Cost per Trip (Estimated for $2008)

Allocation of Total Costs to Residential Land Uses		
Total Regional Arterial System Investments ($2008)	$ 6,981,238,400	
New Residential Development Share of Total Trips	13.0%	
New Residential Development Share of Total Costs		$ 907,561,000
New Residential Vehicle Trips (2002-2030)		
Single Family	1,443,000	
Multi-family[1]	1,394,000	
Total New Residential Vehicle Trips		2,837,000
New Residential Development Cost per Trip (Est. $2008)		$ 320

[1] Multi-family travel demand factor and demand calculations include mobile homes.

Tables 5 and 7; MuniFinancial.

Table 11 – RTCIP Impact Fee (Estimated for $2008)

Land Use	Cost Per Trip	Trip Demand Factor	Fee[1]	New Development (dwelling units)	Estimated Revenue[2]
Single Family	$ 320	11.10	$ 3,552	130,000	$ 461,760,000
Multi-family[3]	320	8.88	2,842	157,000	446,194,000
Total Estimated Revenue					$ 907,954,000
Total New Dwelling Units (2006-2030)					287,000
Weighted Average RTCIP Impact Fee Per Dwelling Unit (Est. $2008)					$ 3,164

[1] Fee per dwelling unit.

[2] Numbers may vary due to rounding.

[3] Multi-family travel demand factor and demand calculations include mobile homes.

Sources: Tables 1, 3 and 10; MuniFinancial.

SECTION 3.0

PROGRAM FACILITIES AND COST ESTIMATES

3.1 PROGRAM FACILITIES

The program facilities, which are subject to the TDIF, are summarized in **Table 12**. Project descriptions and construction schedules are provided below. Project exhibits are included at the end of *Section 3.0*.

Table 12 – TIF Program Facility List

No.	Project	CIP#	Location	From	To	Description
1	Plaza Blvd. Widening	99-09	Plaza Blvd.	Highland Ave.	Euclid Ave.	Widen arterial from 4 lanes to 6 lanes (~ 1.1 miles)
* Project is part of the Regional Arterial System (RAS). Improvements are consistent with RTCIP requirements for use of impact fee revenues (see *Section 5.0*).						

National City TIF Program Facility No. 1 – Plaza Boulevard Widening
The project will increase capacity on Plaza Boulevard from Highland Avenue to Euclid Avenue by widening from a 4-lane Arterial to a 6-lane Arterial. The project includes widening eastbound and westbound Plaza Boulevard, traffic signal upgrades, new sidewalks and curb ramps, pavement resurfacing, signing, striping and pavement delineation, drainage and landscaping improvements, and structural improvements under I-805, including tie-back retaining walls. The project schedule is estimated as follows:

- PS&E Authorization – May 2001
- Environmental Document Approval – June 2006
- Right of Way Authorization – July 2006
- Right of Way Certification – July 2010
- Construction Authorization – February 2014
- Award Construction Contract – April 2014
- Construction Completion – June 2015

3.2 PROJECT COST ESTIMATES

Table 13 summarizes the TIF Program facility cost estimates and anticipated revenues. A detailed cost estimate for each project is provided at the end of *Section 3.0*.

Table 13 – TIF Program Facility Cost Estimates and Anticipated Revenues

TIF Program Facility No. 1 – Plaza Boulevard Widening										
Revenue Sources										
	Prior	**FY 08/09**	**FY 09/10**	**FY 10/11**	**FY 11/12**	**FY 12/13**	**FY 13/14**			
TDIF*	n/a	$288,000	$89,760	$37,458	$140,118	$38,970	$364,485			
RSTP	$2,000,000	$0	$0	$0	$0	$0	$0			
TransNet	$797,417	$0	$200,000	$39,364	$500,000	$200,000	$332,000			
Other **	$0	$0	$0	$0	$0	$0	$0			
Revenues	**$2,797,417**	**$288,000**	**$289,760**	**$76,822**	**$640,118**	**$238,970**	**$696,485**			
Revenue Sources										
							PE	**ROW**	**Construction**	**Total**
TDIF*							$0	$0	$958,791	$958,791
RSTP							$700,000	$1,300,000	$0	$2,000,000
TransNet							$1,200,000	$300,000	$868,781	$2,368,781
Other **							$0	$0	$10,672,428	$10,672,428
Revenues							**$1,900,000**	**$1,600,000**	**$12,500,000**	**$16,000,000**

** See Section 4.0 for the current fee schedule, development forecasts and TDIF revenues.*
*** Estimated to include a combination of Federal, State and Local funds.*

PLAZA BOULEVARD WIDENING PROJECT
FROM HIGHLAND AVENUE TO EUCLID AVENUE

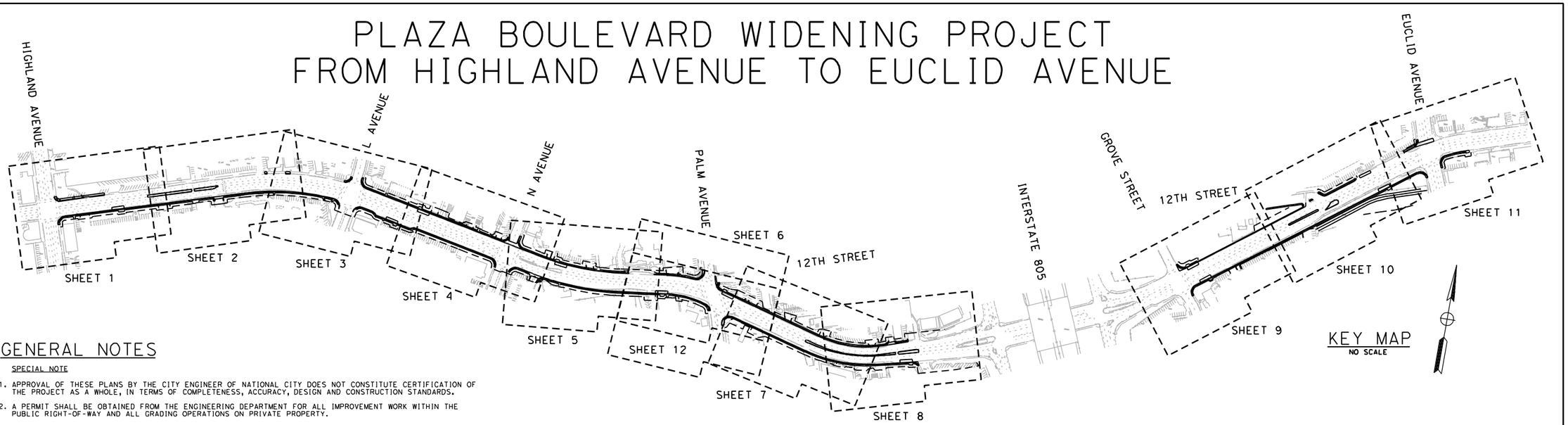

GENERAL NOTES

SPECIAL NOTE

1. APPROVAL OF THESE PLANS BY THE CITY ENGINEER OF NATIONAL CITY DOES NOT CONSTITUTE CERTIFICATION OF THE PROJECT AS A WHOLE, IN TERMS OF COMPLETENESS, ACCURACY, DESIGN AND CONSTRUCTION STANDARDS.
2. A PERMIT SHALL BE OBTAINED FROM THE ENGINEERING DEPARTMENT FOR ALL IMPROVEMENT WORK WITHIN THE PUBLIC RIGHT-OF-WAY AND ALL GRADING OPERATIONS ON PRIVATE PROPERTY.
3. APPROVAL OF THESE PLANS BY THE CITY OF NATIONAL CITY DOES NOT AUTHORIZE ANY WORK OR GRADING TO BE PERFORMED UNTIL THE PROPERTY OWNER'S PERMISSION HAS BEEN OBTAINED AND A VALID PERMIT HAS BEEN ISSUED.
4. NOTWITHSTANDING THE MINIMUM STANDARDS SET FORTH IN THE GRADING ORDINANCE AND NOTWITHSTANDING THE APPROVAL OF THESE GRADING PLANS, THE PERMITTEE IS RESPONSIBLE FOR THE PREVENTION OF DAMAGE TO THE ADJACENT PROPERTY. NO PERSON SHALL EXCAVATE ON LAND SO CLOSE TO THE PROPERTY LINE AS TO ENDANGER ANY ADJOINING PUBLIC STREET, SIDEWALK, ALLEY OR ANY OTHER PUBLIC OR PRIVATE PROPERTY WITHOUT SUPPORTING AND PROTECTING SUCH PROPERTY FROM SETTLING, CRACKING, EROSION, SILTING, SCOUR OR THE DAMAGE WHICH MIGHT RESULT FROM THE GRADING DESCRIBED ON THESE PLANS.
5. THE CONTRACTOR SHALL VERIFY THE EXISTENCE AND LOCATION OF ALL UTILITIES BEFORE COMMENCING WORK. NOTICE OF PROPOSED WORK SHALL BE GIVEN TO THE FOLLOWING AGENCIES:

   UNDERGROUND SERVICE ALERT.....(800) 227-2600
   SAN DIEGO GAS & ELECTRIC.....(858) 611-7343
   AT & T.....(877) 754-8711
   COX COMMUNICATIONS.....(619) 263-9251
   SWEETWATER AUTHORITY.....(619) 409-6754
   SEWER-NATIONAL CITY ENGINEERING DEPT.....(800) 336-4380
   ULTRONICS.....(619) 454-0276
   DANELLA ENGINEERING.....(951) 652-3605
6. IT SHALL BE THE RESPONSIBILITY OF THE CONTRACTOR TO LOCATE ALL SUBSTRUCTURE WHETHER SHOWN OR NOT AND PROTECT THEM FROM DAMAGE. THE EXPENSE OF REPAIR OR REPLACEMENT OF SAID SUBSTRUCTURE SHALL BE BORNE BY THE CONTRACTOR.
7. THE ENGINEER OF WORK SHALL BE NOTIFIED WHEN CONSTRUCTION COMMENCES AND OF ANY CHANGES OR ADDITIONS MADE DURING THE PROGRESS OF CONSTRUCTION. A REPORT CONFIRMING THIS, SIGNED BY A REGISTERED SOILS ENGINEER, SHALL BE SUBMITTED TO THE CITY'S ENGINEERING DEPARTMENT AT THE COMPLETION OF GRADING.
8. ALL PROPERTY CORNERS SHALL BE RESET AFTER THE CONSTRUCTION OF THE IMPROVEMENTS SHOWN HERE ON AT THE CONTRACTOR'S EXPENSE.
9. CONTRACTOR AGREES THAT HE/SHE SHALL ASSUME SOLE AND COMPLETE RESPONSIBILITY FOR JOB SITE CONDITIONS DURING THE COURSE OF CONSTRUCTION OF THIS PROJECT, INCLUDING SAFETY OF ALL PERSONS AND PROPERTY; THAT THIS REQUIREMENT SHALL APPLY CONTINUOUSLY AND NOT BE LIMITED TO NORMAL WORKING HOURS; AND THAT THE CONTRACTOR SHALL DEFEND, INDEMNIFY AND HOLD THE CITY AND THE ENGINEER HARMLESS FROM ANY AND ALL LIABILITY, REAL OR ALLEGED, IN CONNECTION WITH THE PERFORMANCE OF WORK ON THIS PROJECT. EXCEPTING FOR LIABILITY ARISING FROM THE SOLE NEGLIGENCE OF THE CITY OF THE ENGINEER.
10. CONTRACTOR WILL MAKE EXPLORATION EXCAVATIONS AND LOCATE EXISTING UNDERGROUND FACILITIES SUFFICIENTLY AHEAD OF CONSTRUCTION TO PERMIT REVISIONS TO PLANS IF REVISIONS ARE NECESSARY BECAUSE OF ACTUAL LOCATIONS OF EXISTING UTILITIES.
11. LOCATION AND ELEVATION OF IMPROVEMENTS TO BE MET BY WORK TO BE DONE SHALL BE CONFORMED BY FIELD MEASUREMENTS PRIOR TO CONSTRUCTION OF NEW WORK.

GENERAL NOTES (CONT.)

11. BEFORE EXCAVATING FOR THIS CONTRACT, VERIFY LOCATION OF UNDERGROUND UTILITIES. THE EXISTENCE AND LOCATION OF ANY UNDERGROUND UTILITY PIPES OR STRUCTURE SHOWN ON THESE PLANS WERE OBTAINED BY A SEARCH OF THE AVAILABLE RECORDS. TO THE BEST OF OUR KNOWLEDGE THERE ARE NO OTHER EXISTING UTILITIES EXCEPT AS SHOWN ON THESE PLANS.
12. NEITHER THE CITY, NOR THE ENGINEER IS RESPONSIBLE TO PROVIDE SAFETY MEASURE OR REGULATIONS. THE CONTRACTOR SHALL DESIGN OR HAVE DESIGNED, CONSTRUCT AND MAINTAIN, AND BE RESPONSIBLE FOR ALL SAFETY DEVICES, INCLUDING SHORING AND TRAFFIC CONTROL, AND SHALL BE SOLEY RESPONSIBLE FOR CONFORMING TO ALL LOCAL, STATE AND FEDERAL SAFETY STANDARDS, LAWS AND REGULATIONS.
13. INSPECTION NOTES - NO WORK SHALL COMMENCE ON THIS PROJECT PRIOR TO A PRE-CONSTRUCTION MEETING WITH THE CITY OF NATIONAL CITY ENGINEERING DEPARTMENT. CALL THE CITY ENGINEER AT (619) 336-4380 TO SCHEDULE A MEETING.
14. CHANGE ORDER - THE CHANGE ORDERS SHALL BE REQUESTED IN WRITING USING THE CITY OF NATIONAL CITY STANDARD FORM AND ATTACHED WITH PLANS SHOWING IN RED THE REVISIONS FOR APPROVAL.
15. ALL OPERATIONS CONDUCTED FOR THIS PROJECT, INCLUDING THE WARMING UP, REPAIR, ARRIVAL, DEPARTURE OR RUNNING OF TRUCK EARTH MOVING EQUIPMENT, CONSTRUCTION EQUIPMENT AND ANY OTHER ASSOCIATED EQUIPMENT SHALL BE LIMITED TO THE PERIOD BETWEEN 7:00 A.M. AND 5:00 P.M. EACH DAY, MONDAY THROUGH FRIDAY. PRIOR APPROVAL OF THE CITY ENGINEER WILL BE REQUIRED FOR WORK BEFORE 7:00 A.M. AND AFTER 5:00 P.M.
16. STRUCTURAL SECTION OF THE STREET IMPROVEMENT SHALL BE IN ACCORDANCE WITH AN APPROVED SOILS REPORT, BUT NOT LESS THAN THE MINIMUM REQUIREMENT PER NATIONAL CITY STANDARD DRAWING MOD. G24.
17. ALL CURB OUTLETS OR SIDEWALK UNDERDRAINS AND CURB INLETS, WHETHER SHOWN ON THESE PLANS OR NOT, SHALL BE PROTECTED IN PLACE OR REPAIRED OR REPLACED IN KIND PER 2006 REGIONAL STANDARD DRAWINGS. THE EXPENSE OF PROTECTING OR REPLACING SAID FACILITIES SHALL BE BORNE BY THE CONTRACTOR.

GRADING NOTES

SPECIAL NOTE

DUMPING AND STOCKPILING IS PROHIBITED IN NATIONAL CITY. ALL MATERIAL EXCAVATED AND REMOVED FROM THE SITE SHALL BE DISPOSED OF AT A SITE PREAPPROVED BY THE CITY ENGINEER. NO EXCEPTIONS. ALL VIOLATORS WILL BE CITED WITH NOTICES OF CORRECTION, AND LEGAL ACTIONS.

ANY TREES NOT UTILIZED IN LANDSCAPING, ABANDONED STRUCTURES, WEEDS, AND ANY OTHER RUBBISH SHALL BE REMOVED, FILLED OR OTHERWISE DISPOSED OF SO AS TO LEAVE THE AREAS THAT HAVE BEEN DISTURBED WITH A NEAT AND FINISHED APPEARANCE, FREE FROM UNSIGHTLY DEBRIS.

SEE GEOTECHNICAL REPORT FOR ADDITIONAL NOTES.

TRAFFIC CONTROL

TRAFFIC CONTROL:

CONTRACTOR SHALL PREPARE AND SUBMIT TRAFFIC CONTROL PLANS TO THE CITY OF NATIONAL CITY ENGINEERING DEPARTMENT FOR REVIEW AND APPROVAL, PRIOR TO THE ISSUANCE OF A CONSTRUCTION PERMIT. THE MINIMUM OF AT LEAST ONE LANE (12 FT. WIDE) IN EACH DIRECTION SHALL REMAIN OPEN AT ALL TIMES DURING THE CONSTRUCTION OF THIS PROJECT.

STATEMENT OF THE RESPONSIBLE CHARGE

I HEREBY STATE THAT I AM THE ENGINEER OF WORK FOR THIS PROJECT, THAT I HAVE EXERCISED RESPONSIBLE CHARGE OVER THE DESIGN OF THE PROJECT AS DEFINED IN SECTION 6703 OF THE BUSINESS AND PROFESSIONS CODE, AND THAT THE DESIGN IS CONSISTENT WITH CURRENT STANDARDS. I UNDERSTAND THAT THE CHECK OF PROJECT DRAWINGS AND SPECIFICATIONS BY THE CITY OF NATIONAL CITY IS CONFINED TO A REVIEW ONLY AND DOES NOT RELIEVE ME, AS ENGINEER OF WORK, OF MY RESPONSIBILITIES FOR THIS PROJECT.

BY:_____ DATE:_____

GLEN PARKER
R.C.E. C66490 EXP. 06/30/10

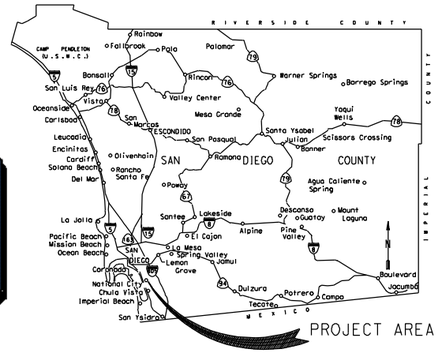

VICINITY MAP
NO SCALE

STANDARDS AND SPECIFICATIONS

THIS PROJECT SHALL BE CONSTRUCTED IN ACCORDANCE WITH THE SAN DIEGO REGIONAL STANDARD DRAWINGS (2006 EDITION) AND CITY OF NATIONAL CITY STANDARD DRAWINGS, AND CALTRANS STANDARD SPECIFICATIONS, TOGETHER WITH THE 2006 REGIONAL SUPPLEMENT AMENDMENTS AND THE LATEST EDITION OF THE CALIFORNIA DEPARTMENT OF TRANSPORTATION "MANUAL OF TRAFFIC CONTROLS FOR CONSTRUCTION AND MAINTENANCE WORK ZONES."

OWNER

CITY OF NATIONAL CITY
1243 NATIONAL CITY BOULEVARD
NATIONAL CITY, CALIFORNIA 91950

LEGAL DESCRIPTION

THE PROJECT IS LOCATED IN THE PUBLIC RIGHT-OF-WAY ALONG PLAZA BOULEVARD BETWEEN HIGHLAND AVENUE AND EUCLID AVENUE.

BENCH MARK

NWBP DIVISION STREET @ 43RD
STREET CITY OF SAN DIEGO ELEV: 39.412 (NGVD 29)

SHEET INDEX

1	TITLE SHEET
2-4	TYPICAL CROSS SECTION SHEETS
5-16	LAYOUT AND PROFILE SHEETS
17-21	CURB RETURN LAYOUT AND PROFILE SHEETS
22-27	CONSTRUCTION DETAIL SHEETS
28-38	TEMPORARY WATER POLLUTION CONTROL SHEETS
39-49	GRADING AND DRAINAGE SHEETS
50-55	DRAINAGE PROFILE SHEETS
56-57	DRAINAGE DETAIL SHEETS
58-68	UTILITY PLAN SHEETS
69-101	STAGE CONSTRUCTION SHEETS
102-114	PAVEMENT DELINEATION/SIGNING PLAN SHEETS
115-116	RETAINING WALL SHEETS
117-122	TRAFFIC SIGNAL SHEETS

RECORD DRAWINGS (AS-BUILT)

NOTE TO CONTRACTOR: UPON COMPLETION OF WORK, CONTRACTOR SHALL DELIVER TO THE ENGINEER AND THE CITY, 6 UP-TO-DATE SETS (AS-BUILT) RECORD DRAWINGS. SUCH DRAWINGS SHALL BE BLUEPRINT COPIES OF THE PLANS SHOWING IN RED INK AND IN DETAIL ALL CONSTRUCTION CHANGES, ESPECIALLY DEPTHS OF CONDUIT. UTILITIES SHALL BE DIMENSIONED FROM THE CLOSEST PERMANENT STRUCTURE.

SURVEYOR: AGUIRRE & ASSOCIATES

BENCHMARK: NWBP DIVISION STREET @ 43RD STREET CITY OF SAN DIEGO ELEV: 39.412 (NGVD 29)

HORIZONTAL CONTROL: THE BASIS OF BEARINGS FOR THIS PROJECT IS NAD83. THE HORIZONTAL CONTROL IS BASED ON A FAST STATIC GPS NETWORK CONTROL SURVEY FILED AS ROS 17515.

CONSTRUCTION RECORDS

DATE STARTED: _____

INSPECTOR: _____

DATE COMPLETED: _____

REVISIONS	BY	APPROVED	DATE

ENGINEERING DEPARTMENT

AS-BUILT

BY	APPROVED	DATE

PREPARED BY:

DOKKEN ENGINEERING
www.dokkenengineering.com
5675 Ruffin Road, Suite 250 San Diego,CA 92123
Tel (858) 514-8377

REGISTERED PROFESSIONAL ENGINEER
GLEN PARKER
No. C66490
Exp. 6/30/12
CIVIL
STATE OF CALIFORNIA

PLANS FOR THE IMPROVEMENT OF:

PLAZA BOULEVARD

FROM HIGHLAND AVENUE TO EUCLID AVENUE

CITY OF NATIONAL CITY

CITY ENGINEER RCE — DATE: 8/19/2010

	INITIAL	DATE	PROJECT NO.	
DESIGN BY:	MF	12/08		SPEC. NO.
CHECK BY:	GP	12/08	SHEET 1 OF 122	

DATE PLOTTED => 2/4/2011
TIME PLOTTED => 10:05:09 AM

USERNAME=> nicoled
DGN FILE=> ...\1646_title.dgn

STRUCTURAL SECTION TYPES			
1	14.5" HMA 3" CL2-AB	PLAZA Blvd/ CROSS STREETS	3 3" HMA 9" CL2-AB DRIVEWAYS/ PARKING LOTS
2	9" PCC 6" CL2-AB	CONCRETE BUS PAD	

EXISTING STRUCTURAL SECTIONS
A 7" AC 10" AB

*AS THICKNESS VARIES IN SHOULDER SECTION

ABBREVIATIONS:

Bk SW - BACK OF SIDEWALK
Exist - EXISTING
SW - SIDEWALK
Max - MAXIMUM
RW - RETAINING WALL
OG - ORIGINAL GRADE
TC - TOP OF CURB
PG - PROFILE GRADE
R/W - RIGHT OF WAY
AC - ASPHALT CONCRETE
AB - AGGREGATE BASE
AS - AGGREGATE SUBBASE
CTB - CEMENT TREATED BASE
CL2-AB- CLASS TWO AGGREGATE BASE
HMA - HOT MIX ASPHALT
PCC - PORTLAND CEMENT CONCRETE
ETW - EDGE OF TRAVELED WAY
ES - EDGE OF SHOULDER
Sta - STATION
Var - VARIES
Blvd - BOULEVARD

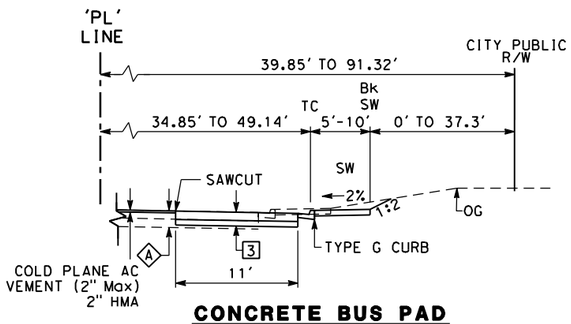

CONCRETE BUS PAD

Sta 'PL' 24+99.28 TO 25+49.28
Sta 'PL' 71+26.08 TO 71+76.08

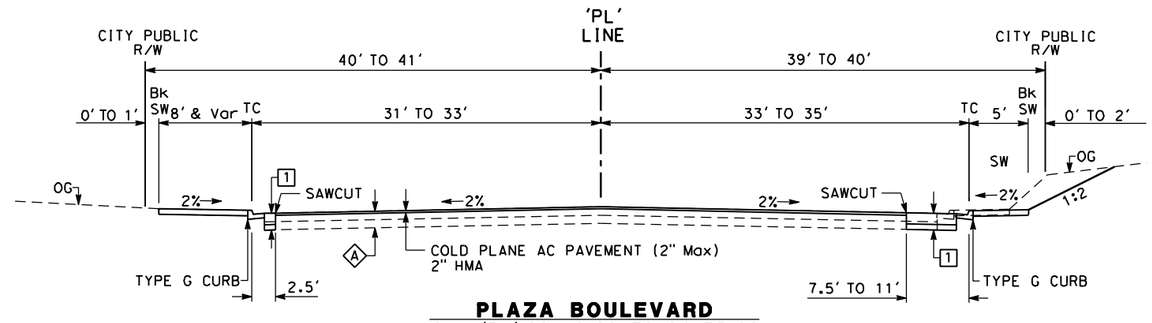

PLAZA BOULEVARD

Sta 'PL' 22+40.28 TO 24+75.98

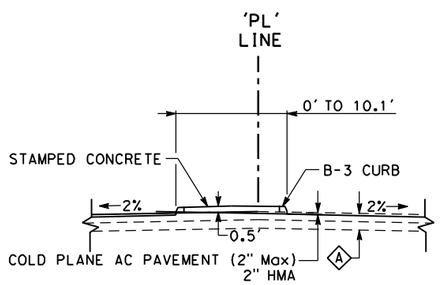

CONCRETE MEDIAN

Sta 'PL' 26+50.88 TO 29+42.69

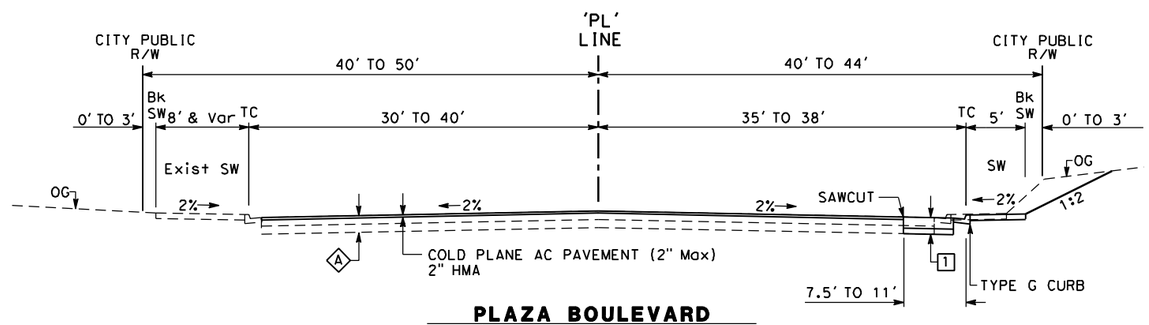

PLAZA BOULEVARD

Sta 'PL' 24+75.98 TO 34+95.72

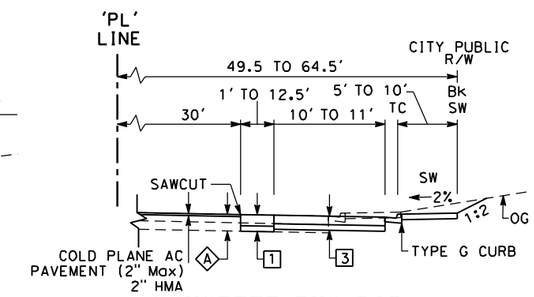

CONCRETE BUS PAD

Sta 'PL' 36+61.93 TO 37+11.93
Sta 'PL' 58+59.79 TO 59+09.73
Sta 'PL' 79+46.24 TO 79+96.24

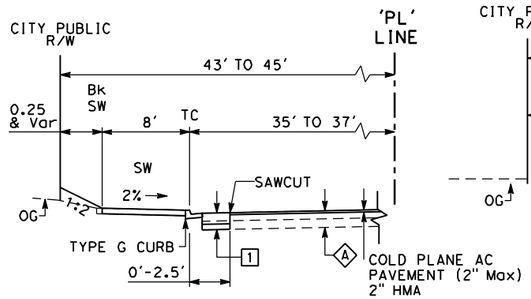

PLAZA BOULEVARD

Sta 'PL' 31+35.57 TO 31+45.27
Sta 'PL' 32+17.43 TO 32+36.74

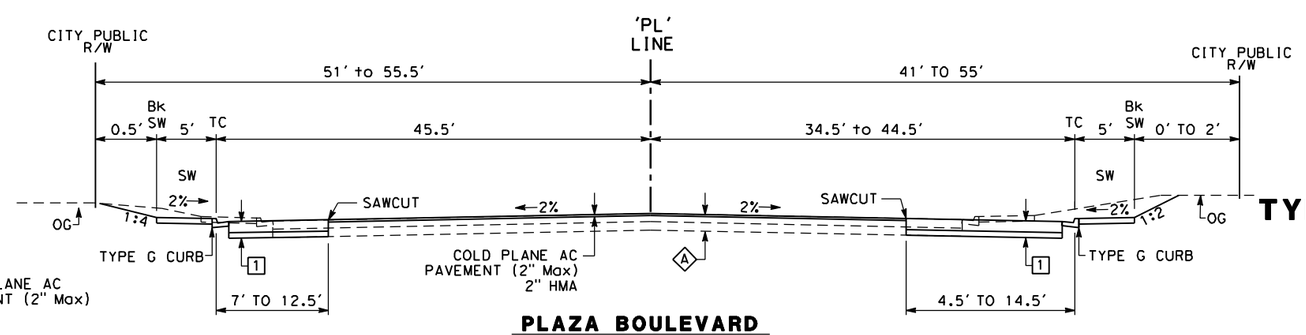

PLAZA BOULEVARD

Sta 'PL' 34+95.72 TO 41+79.76

TYPICAL CROSS SECTIONS

NO SCALE

PLANS FOR THE IMPROVEMENT OF:

PLAZA BOULEVARD

FROM HIGHLAND AVENUE TO EUCLID AVENUE

CITY OF NATIONAL CITY

PREPARED BY:

DOKKEN ENGINEERING
www.dokkenengineering.com
5675 Ruffin Road, Suite 250 San Diego,CA 92123
Tel (858) 514-8377

REGISTERED PROFESSIONAL ENGINEER GLEN PARKER NO. C66490 Exp. 6/30/12 CIVIL STATE OF CALIFORNIA

CITY ENGINEER RCE	INITIAL	DATE	PROJECT NO.	DATE
DESIGN BY:	MF	12/08		
CHECK BY:	GP	12/08	SHEET 2 OF 122	SPEC. NO. X-1

DATE PLOTTED => 2/4/2011
TIME PLOTTED => 10:05:10 AM

SURVEYOR: AGUIRRE & ASSOCIATES
BENCHMARK: NWBP DIVISION STREET @ 43RD STREET, CITY OF SAN DIEGO ELEV: 39.412 (NGVD 29)
HORIZONTAL CONTROL: THE BASIS OF BEARINGS FOR THIS PROJECT IS NAD83. THE HORIZONTAL CONTROL IS BASED ON A FAST STATIC GPS NETWORK CONTROL SURVEY FILED AS ROS 17515.

CONSTRUCTION RECORDS
DATE STARTED:
INSPECTOR:
DATE COMPLETED:

REVISIONS | BY | APPROVED | DATE

ENGINEERING DEPARTMENT
AS-BUILT | BY | APPROVED | DATE

USERNAME=> nicoled
DGN FILE=> ...\b26390ca001.dgn

SURVEYOR: AGUIRRE & ASSOCIATES

BENCHMARK: NWBP DIVISION STREET @ 43RD STREET, CITY OF SAN DIEGO ELEV: 39.412 (NGVD 29)

HORIZONTAL CONTROL: THE BASIS OF BEARINGS FOR THIS PROJECT IS NAD83. THE HORIZONTAL CONTROL IS BASED ON A FAST STATIC GPS NETWORK CONTROL SURVEY FILED AS ROS 17515.

CONSTRUCTION RECORDS

DATE STARTED:

INSPECTOR:

DATE COMPLETED:

REVISIONS	BY	APPROVED	DATE

ENGINEERING DEPARTMENT	BY	APPROVED	DATE
AS-BUILT			

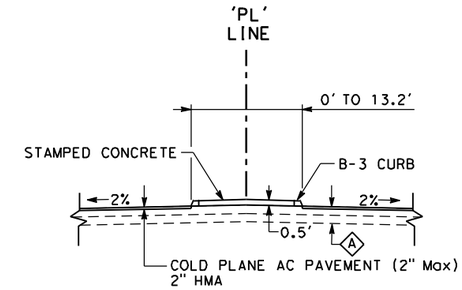

CONCRETE MEDIAN
Sta 'PL' 54+66.09 TO 59+40.41

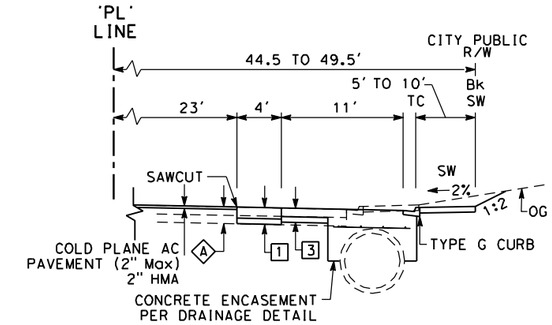

CONCRETE BUS PAD
Sta 'PL' 48+04.55 TO 48+54.55

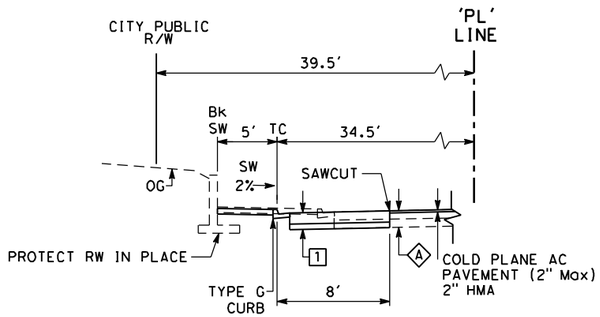

PLAZA BOULEVARD
Sta 'PL' 51+65 TO 51+92
Sta 'PL' 52+22 TO 53+03

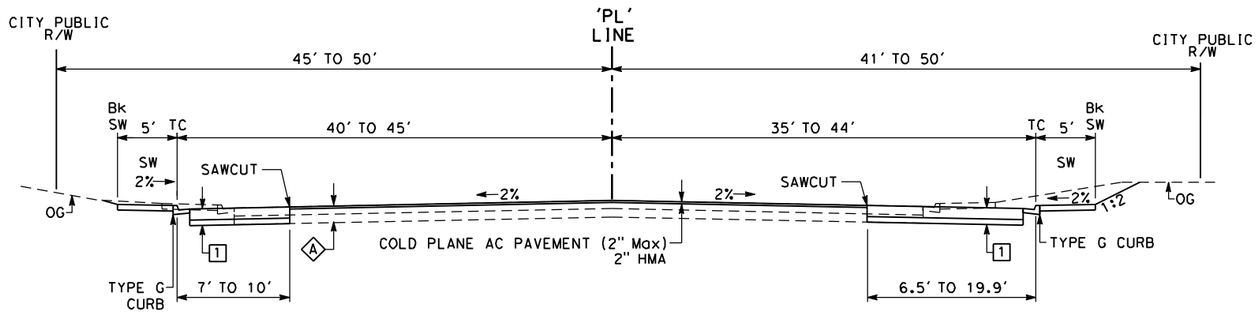

PLAZA BOULEVARD
Sta 'PL' 44+16.42 TO 46+93.20
Sta 'PL' 47+94.48 TO 59+40.41

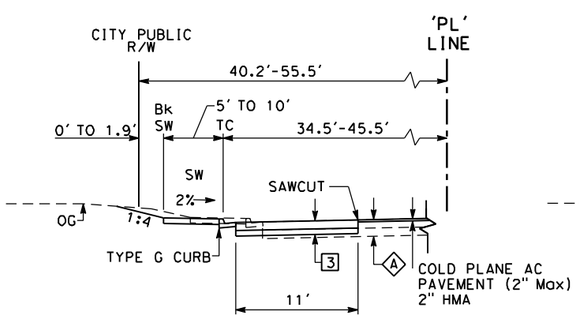

CONCRETE BUS PAD
Sta 'PL' 37+69.77 TO 38+19.77
Sta 'PL' 43+74.95 TO 44+27.20
Sta 'PL' 50+73.86 TO 51+23.86
Sta 'PL' 71+03.70 TO 71+53.70

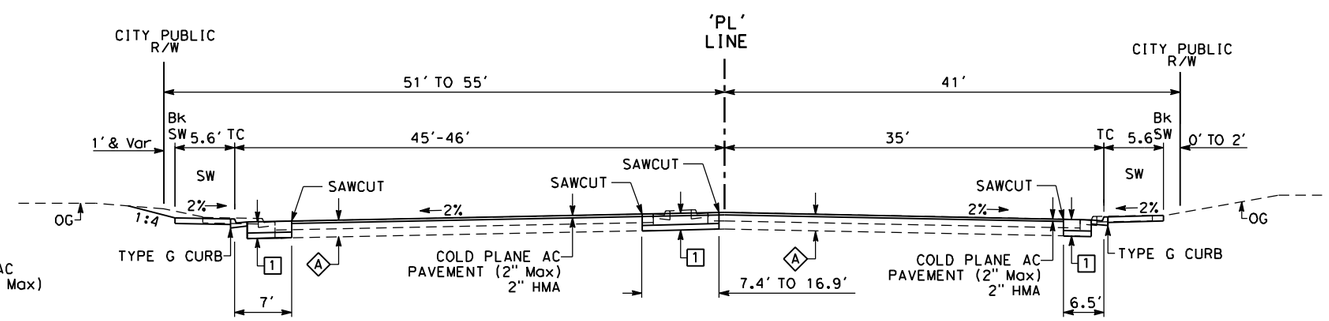

PLAZA BOULEVARD
Sta 'PL' 42+27.60 TO 44+16.42

TYPICAL CROSS SECTIONS

NO SCALE

PREPARED BY:

DOKKEN ENGINEERING
www.dokkenengineering.com
5675 Ruffin Road, Suite 250 San Diego,CA 92123
Tel (858) 514-8377

REGISTERED PROFESSIONAL ENGINEER
GLEN PARKER
No. C66490
Exp. 6/30/12
CIVIL
STATE OF CALIFORNIA

PLANS FOR THE IMPROVEMENT OF:

PLAZA BOULEVARD

FROM HIGHLAND AVENUE TO EUCLID AVENUE

CITY OF NATIONAL CITY

CITY ENGINEER RCE	INITIAL	DATE	PROJECT NO.	DATE
DESIGN BY:	MF	12/08		
CHECK BY:	GP	12/08	SHEET 3 OF 122	SPEC. NO. X-2

DATE PLOTTED => 2/4/2011
TIME PLOTTED => 10:05:12 AM

USERNAME=> nicoled
DGN FILE=> ...\b26390ca002.dgn

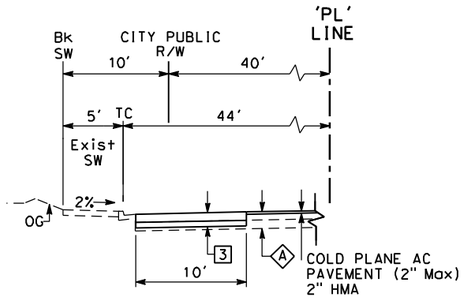

CONCRETE BUS PAD
Sta 'PL' 79+02.65 TO 79+52.65

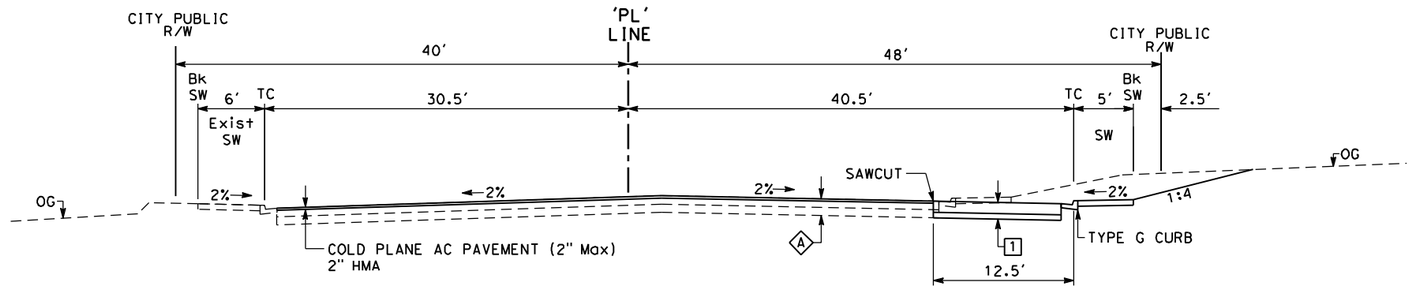

PLAZA BOULEVARD
Sta 'PL' 82+08.50 TO 83+69.14

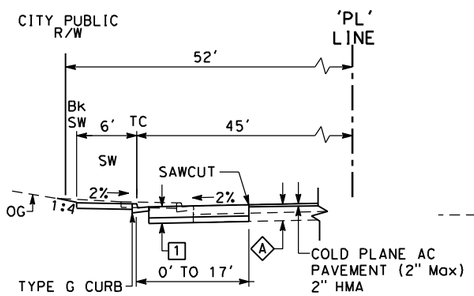

PLAZA BOULEVARD
Sta 'PL' 81+12.88 TO 82+36.85

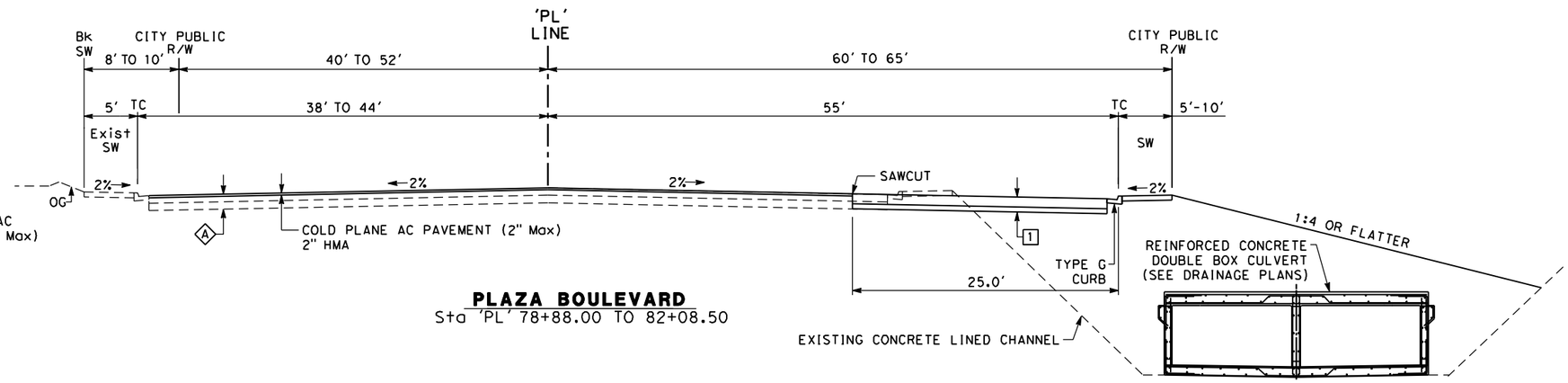

PLAZA BOULEVARD
Sta 'PL' 78+88.00 TO 82+08.50

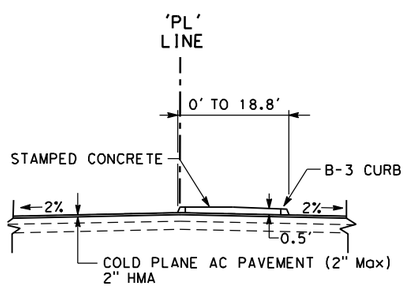

CONCRETE MEDIAN
Sta 'PL' 75+54.05 TO 77+80.00

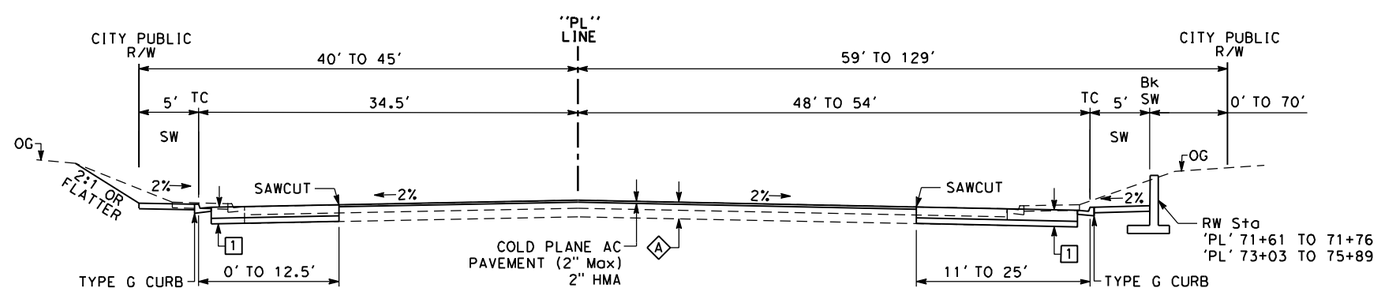

PLAZA BOULEVARD
Sta 'PL' 70+50.79 TO 78+88.

TYPICAL CROSS SECTIONS
NO SCALE

PLANS FOR THE IMPROVEMENT OF:
PLAZA BOULEVARD
FROM HIGHLAND AVENUE TO EUCLID AVENUE

CITY OF NATIONAL CITY

PREPARED BY:
DOKKEN ENGINEERING
www.dokkenengineering.com
5675 Ruffin Road, Suite 250 San Diego,CA 92123
Tel (858) 514-8377

REGISTERED PROFESSIONAL ENGINEER GLEN PARKER No. C66490 Exp. 6/30/12 CIVIL STATE OF CALIFORNIA

CITY ENGINEER RCE	INITIAL	DATE	PROJECT NO.	DATE
DESIGN BY:	MF	12/08		SPEC. NO.
CHECK BY:	GP	12/08	SHEET 4 OF 122	X-3

SURVEYOR: AGUIRRE & ASSOCIATES
BENCHMARK: NWBP DIVISION STREET @ 43RD STREET, CITY OF SAN DIEGO ELEV: 39.412 (NGVD 29)
HORIZONTAL CONTROL: THE BASIS OF BEARINGS FOR THIS PROJECT IS NAD83. THE HORIZONTAL CONTROL IS BASED ON A FAST STATIC GPS NETWORK CONTROL SURVEY FILED AS ROS 17515.

CONSTRUCTION RECORDS
DATE STARTED:
INSPECTOR:
DATE COMPLETED:

REVISIONS | BY | APPROVED | DATE

ENGINEERING DEPARTMENT
AS-BUILT | BY | APPROVED | DATE

DATE PLOTTED => 2/4/2011
TIME PLOTTED => 10:05:13 AM

USERNAME=> nicoled
DGN FILE=> ...\b26390ca003.dgn

PLAZA BOULEVARD WIDENING "SMART" CORRIDOR PROJECT
DETAILED ENGINEERS CONSTRUCTION COST ESTIMATE

Item No	Code	Description	Unit	Quantity	Unit Price	Extension
1	66015	FEDERAL TRAINEE PROGRAM	EA	8	$800.00	$6,400.00
2	66061	CHP ENHANCED ENFORCEMENT	LS	1	$55,000.00	$55,000.00
3	66063	TRAFFIC MANAGEMENT PLAN - PUBLIC INFORMATION	LS	1	$75,000.00	$75,000.00
4	66065	TOW TRUCK SERVICE PATROL	LS	1	$20,000.00	$20,000.00
5	66070	MAINTAIN TRAFFIC	LS	1	$80,000.00	$80,000.00
6	66094	VALUE ANALYSIS	LS	1	$10,000.00	$10,000.00
7	66105	RESIDENT ENGINEERS OFFICE	LS	1	$40,000.00	$40,000.00
8	66595	WATER POLLUTION CONTROL	LS	1	$30,000.00	$30,000.00
9	66597	STORM WATER SAMPLING AND ANALYSIS	LS	1	$25,000.00	$25,000.00
10	66610	PARTNERING	LS	1	$15,000.00	$15,000.00
11	66666	COMPENSATION ADJUSTMENTS FOR PRICE INDEX FLUCTUATIONS	LS	1	$4,500.00	$4,500.00
12	66921	DISPUTE RESOLUTION ADVISOR	LS	1	$5,000.00	$5,000.00
13	70012	PROGRESS SCHEDULE (CRITICAL PATH)	LS	1	$10,000.00	$10,000.00

Item No	Code	Description	Unit	Quantity	Unit Price	Extension
14	74017	PREPARE STORM WATER POLLUTION PREVENTION PROGRAM	LS	1	$20,000.00	$20,000.00
15	74019	HEALTH AND SAFETY PLAN	LS	1	$10,000.00	$10,000.00
16	71321	TEMPORARY FENCE (TYPE CL-6)	LF	4,000	$8.00	$32,000.00
17	74028	TEMPORARY FIBER ROLL	LF	4,680	$4.00	$18,720.00
18	74032	TEMPORARY CONCRETE WASHOUT FACILITY	EA	16	$2,700.00	$43,200.00
19	74033	TEMPORARY CONSTRUCTION ENTRANCE (TYPE 2)	EA	15	$2,500.00	$37,500.00
20	74037	MOVE IN / MOVE OUT (TEMPORARY EROSION CONTROL)	LS	1	$1,000.00	$1,000.00
21	74038	TEMPORARY DRAINAGE INLET PROTECTION	EA	40	$330.00	$13,200.00
22	74041	STREET SWEEPING	LS	1	$45,000.00	$45,000.00
23	74051	TEMPORARY HYDRAULIC MULCH	SQYD	3,600	$0.90	$3,240.00
24	120090	CONSTRUCTION AREA SIGNS	EA	53	$350.00	$18,550.00
25	120100	TRAFFIC CONTROL SYSTEM	LS	1	$160,000.00	$160,000.00
26	120159	TEMPORARY TRAFFIC STRIPE (PAINT)	LF	27,480	$0.70	$19,236.00
27	120199A	TRAFFIC PLASTIC DRUM	EA	820	$45.00	$36,900.00

Item No	Code	Description	Unit	Quantity	Unit Price	Extension
28	120300	TEMPORARY PAVEMENT MARKER	EA	1,037	$4.00	$4,148.00
29	128650	PORTABLE CHANGEABLE MESSAGE SIGN	EA	8	$4,400.00	$35,200.00
30	129000	TEMPORARY RAILING (TYPE K)	LF	160	$10.00	$1,600.00
31	129100	TEMPORARY CRASH CUSHION MODULE	EA	22	$500.00	$11,000.00
32	150608	REMOVE CHAIN LINK FENCE	LF	1,200	$4.00	$4,800.00
33	150710	REMOVE TRAFFIC STRIPE	LF	21,300	$0.90	$19,170.00
34	150712	REMOVE THERMOPLASTIC PAVEMENT MARKING	SQFT	5,600	$2.00	$11,200.00
35	150722	REMOVE PAVEMENT MARKER	EA	870	$3.00	$2,610.00
36	150741	REMOVE ROADSIDE SIGN ON MAST ARM	EA	9	$200.00	$1,800.00
37	150742	REMOVE ROADSIDE SIGN (TWO POST)	EA	2	$150.00	$300.00
38	150744	REMOVE ROADSIDE SIGN (WOOD POST)	EA	15	$100.00	$1,500.00
39	150745	REMOVE ROADSIDE SIGN (METAL POST)	EA	23	$125.00	$2,875.00
40	150747	REMOVE ROADSIDE SIGN (STRAP AND SADDLE BRACKET)	EA	4	$115.00	$460.00
41	150804	REMOVE DRAINAGE FACILITY	EA	9	$750.00	$6,750.00

Item No	Code	Description	Unit	Quantity	Unit Price	Extension
42	150805	REMOVE CULVERT	LF	180	$150.00	$27,000.00
43	150820	REMOVE INLET	EA	19	$1,200.00	$22,800.00
44	150829	REMOVE RETAINING WALL	LF	87	$400.00	$34,800.00
45	150830	REMOVE RETAINING WALL (PORTION)	LS	1	$8,500.00	$8,500.00
46	150860	REMOVE BASE AND SURFACING	SQFT	1,380	$2.60	$3,588.00
47	152387	RELOCATE ROADSIDE SIGN-TWO POST	EA	8	$480.00	$3,840.00
48	152391	RELOCATE ROADSIDE SIGN (METAL POST)	EA	29	$300.00	$8,700.00
49	152392	RELOCATE ROADSIDE SIGN (WOOD POST)	EA	17	$250.00	$4,250.00
50	152440	ADJUST MANHOLE TO GRADE	EA	5	$500.00	$2,500.00
51	153112	COLD PLANE ASPHALT CONCRETE PAVEMENT (.15' MAXIMUM)	SQFT	126,140	$0.40	$50,456.00
52	153220	REMOVE CONCRETE (CHANNEL)	CY	345	$400.00	$138,000.00
53	153239	REMOVE CONCRETE (CURB, GUTTER, AND SIDEWALK)	CY	1,100	$650.00	$715,000.00
54	160101	CLEARING AND GRUBBING	LS	1	$40,000.00	$40,000.00
55	170101	DEVELOP WATER SUPPLY	LS	1	$30,000.00	$30,000.00

Item No	Code	Description	Unit	Quantity	Unit Price	Extension
56	190101	ROADWAY EXCAVATION	CY	6,730	$40.00	$269,200.00
57	193118	CONCRETE BACKFILL	CY	30	$150.00	$4,500.00
58	194001	DITCH EXCAVATION	CY	33	$20.00	$660.00
59	198001	IMPORTED BORROW	TON	320	$50.00	$16,000.00
60	200001	HIGHWAY PLANTING	LS	1	$250,000.00	$250,000.00
61	203016	EROSION CONTROL (TYPE D)	SQYD	3,500	$1.75	$6,125.00
62	203017	EROSION CONTROL (HYDRAULIC MATRIX)	SQYD	120	$0.55	$66.00
63	203021	FIBER ROLLS	LF	3,030	$10.00	$30,300.00
64	203028A	CHECK DAM	LF	35	$11.00	$385.00
65	203031A	DRAINAGE INLET PROTECTION	EA	4	$400.00	$1,600.00
66	260201	CLASS 2 AGGREGATE BASE	CY	10,180	$50.00	$509,000.00
67	390133	HOT MIX ASPHALT CONCRETE (TYPE B)	TON	8,750	$110.00	$962,500.00
68	510502	MINOR CONCRETE (MINOR STRUCTURE)	CY	88	$1,600.00	$140,800.00
69	510512	MINOR CONCRETE (BOX CULVERT)	CY	1,200	$1,350.00	$1,620,000.00

Item No	Code	Description	Unit	Quantity	Unit Price	Extension
70	510526	MINOR CONCRETE (BACKFILL)	CY	390	$320.00	$124,800.00
71	510530	MINOR CONCRETE (WALL)	CY	14	$900.00	$12,600.00
72	510540	MINOR CONCRETE (MINOR STRUCTURE)	SQFT	2,800	$70.00	$196,000.00
73	511123	CONCRETE (RAPID SETTING)	CY	340	$650.00	$221,000.00
74	513553	RETAINING WALL (MASONRY WALL)	SQFT	7,300	$70.00	$511,000.00
75	560248	FURNISH SINGLE SHEET ALUMINUM SIGN (0.063"-UNFRAMED)	SQFT	440	$14.00	$6,160.00
76	560251	FURNISH SINGLE SHEET ALUMINUM SIGN (0.063"-FRAMED)	SQFT	90	$15.00	$1,350.00
77	566011	ROADSIDE SIGN - ONE POST	EA	33	$430.00	$14,190.00
78	566012	ROADSIDE SIGN - TWO POST	EA	8	$870.00	$6,960.00
79	568001	INSTALL SIGN (STRAP AND SADDLE BRACKET METHOD)	EA	7	$210.00	$1,470.00
80	568015	INSTALL SIGN (MAST-ARM HANGER METHOD)	EA	13	$900.00	$11,700.00
81	641132	12" PLASTIC PIPE	LF	6	$50.00	$300.00
82	650014	18" REINFORCED CONCRETE PIPE	LF	225	$150.00	$33,750.00
83	650018	24" REINFORCED CONCRETE PIPE	LF	250	$175.00	$43,750.00

Item No	Code	Description	Unit	Quantity	Unit Price	Extension
84	650022	30" REINFORCED CONCRETE PIPE	LF	60	$200.00	$12,000.00
85	650026	36" REINFORCED CONCRETE PIPE	LF	5	$250.00	$1,250.00
86	665016	16" CORRUGATED STEEL PIPE (.064" THICK)	LF	13	$60.00	$780.00
87	721431	CONCRETE (CONCRETE APRON)	CY	3	$1,000.00	$3,000.00
88	721810	SLOPE PAVING (CONCRETE)	CY	7	$1,000.00	$7,000.00
89	731502	MINOR CONCRETE (CONCRETE BUS PAD)	CY	190	$750.00	$142,500.00
90	731504	MINOR CONCRETE (CURB AND GUTTER)	CY	670	$750.00	$502,500.00
91	731507	MINOR CONCRETE (GUTTER DEPRESSION)	CY	36	$400.00	$14,400.00
92	731516	MINOR CONCRETE (DRIVEWAY)	CY	60	$750.00	$45,000.00
93	731517	MINOR CONCRETE (GUTTER)	CY	20	$400.00	$8,000.00
94	731519	MINOR CONCRETE (STAMPED CONCRETE)	CY	315	$600.00	$189,000.00
95	731521	MINOR CONCRETE (SIDEWALK)	CY	600	$750.00	$450,000.00
96	750001	MISCELLANEOUS IRON AND STEEL	LB	830	$4.00	$3,320.00
97	750010	MANHOLE FRAME AND COVER	EA	13	$500.00	$6,500.00

Item No	Code	Description	Unit	Quantity	Unit Price	Extension
98	840504	4" THERMOPLASTIC TRAFFIC STRIPE	LF	680	$1.25	$850.00
99	840506	8" THERMOPLASTIC TRAFFIC STRIPE	LF	4,280	$2.50	$10,700.00
100	840508	8" THERMOPLASTIC TRAFFIC STRIPE (BROKEN 12-3)	LF	1,190	$2.25	$2,677.50
101	840515	THERMOPLASTIC PAVEMENT MARKING	SQFT	7,000	$3.00	$21,000.00
102	840521	4" THERMOPLASTIC TRAFFIC STRIPE (BROKEN 6-1)	LF	470	$1.90	$893.00
103	840656	PAINT TRAFFIC STRIPE (2-COAT)	LF	32,800	$0.50	$16,400.00
104	850111	PAVEMENT MARKER (RETROREFLECTIVE)	EA	1,200	$3.50	$4,200.00
105	860101	BUS STOP SHELTER (W/ BENCH, LIGHTING AND TRASH RECEPTICLE)	EA	12	$6,500.00	$78,000.00
106	860251	TRAFFIC SIGNAL & LIGHTING MODIFICATION (PLAZA BLVD AT HIGHLAND AVE)	LS	1	$50,000.00	$50,000.00
107	860252	TRAFFIC SIGNAL & LIGHTING MODIFICATION (PLAZA BLVD AT L AVE)	LS	1	$50,000.00	$50,000.00
108	860253	TRAFFIC SIGNAL & LIGHTING MODIFICATION (PLAZA BLVD AT N AVE)	LS	1	$80,000.00	$80,000.00
109	860254	TRAFFIC SIGNAL & LIGHTING MODIFICATION (PLAZA BLVD AT PALM AVE)	LS	1	$170,000.00	$170,000.00
110	860255	TRAFFIC SIGNAL & LIGHTING MODIFICATION (PLAZA BLVD AT I-805 SOUTHBOUND RAMPS)	LS	1	$175,000.00	$175,000.00
111	860256	TRAFFIC SIGNAL & LIGHTING MODIFICATION (PLAZA BLVD AT I-805 NORTHBOUND RAMPS)	LS	1	$175,000.00	$175,000.00

Item No	Code	Description	Unit	Quantity	Unit Price	Extension
112	860257	TRAFFIC SIGNAL & LIGHTING MODIFICATION (PLAZA BLVD AT GROVE ST)	LS	1	$80,000.00	$80,000.00
113	860258	TRAFFIC SIGNAL & LIGHTING MODIFICATION (PLAZA BLVD AT EUCLID AVE)	LS	1	$125,000.00	$125,000.00
114	860301	REMOVE AND REPLACE TRAFFIC LOOPS	EA	220	$350.00	$77,000.00
115	860703	MODIFY AND MAINTAIN FIBER OPTIC CONDUIT AND CABLE	LS	1	$100,000.00	$100,000.00
116	860801	SIGNAL TIMING OPTIMIZATION	LS	1	$80,000.00	$80,000.00
117	999990	MOBILIZATION	LS	1	$200,000.00	$200,000.00
		SUBTOTAL				$9,705,429.50
		TRAFFIC MONITORING EQUIPMENT				
118	ATT - STATIONS	ARTERIAL TRAVEL TIME STATIONS (INCLUDES EQUIPMENT / MATERIALS LISTED BELOW)	EA	5	$15,000.00	$75,000.00
	AP240-E	ACCESS POINT	EA	5	-	-
	AP240-E-48PS	48VDC POWER SUPPLY & POE INJECTOR	EA	5	-	-
	KIT-MTG	MOUNTING KIT	EA	10	-	-
	RP240-B-LL	REPEATER	EA	5	-	-
	VSN240-F	FLUSH-MOUNT WIRELESSS SENSOR	EA	74	-	-

Item No	Code	Description	Unit	Quantity	Unit Price	Extension
	VSN240-EPX	EPOXY TUBE FOR INSTALLATION OF VSN240-F OR T	EA	74	-	-
119	WARR-01	SENSYS NETWORKS EXTENDED PRODUCT WARRANTY - 5 YEARS	LS	1	$6,000.00	$6,000.00
120	ATT - HOSTING	SENSYS NETWORKS TRAVEL TIME SOFTWARE SUBSCRIPTION LICENSE SERVICE - 5 YEARS	LS	1	$15,000.00	$15,000.00
121	SEN-01	SENSYS NETWORKS INSTALLATION SUPPORT SERVICES	LS	1	$4,500.00	$4,500.00
		SUBTOTAL				$100,500.00
		TRAFFIC MONITORING EQUIPMENT				
122	CCTV-001	FURNISH AND INSTALL CCTV CAMERA COMPLETE INCLUDING MOUNTING HARDWARE AND CONDUCTORS	EA	6	$6,000.00	$36,000.00
123	CCTV-002	FURNISH AND INSTALL SPLICE CLOSURE	EA	6	$800.00	$4,800.00
124	CCTV-003	FURNISH & INSTALL 72 STRAND SM FIBER OPTIC CABLE IN EXISTING CONDUIT	LF	12,000	$5.00	$60,000.00
125	CCTV-004	FURNISH & INSTALL 12 STRAND SM FIBER OPTIC CABLE IN EXISTING CONDUIT	LF	1,000	$2.00	$2,000.00
126	CCTV-005	SPLICE AND TERMINATE FIBER	EA	100	$50.00	$5,000.00
127	CCTV-006	FURNISH AND INSTALL FIBER PATCH CABLE	EA	50	$50.00	$2,500.00
128	CCTV-007	FURNISH AND INSTALL 12 PORT PANEL, SPLICE TRAY AND CABINET TERMINATION	EA	6	$400.00	$2,400.00
129	CCTV-008	LOCAL ETHERNET SWITCH	EA	6	$1,500.00	$9,000.00

Item No	Code	Description	Unit	Quantity	Unit Price	Extension
130	CCTV-009	FURNISH AND INSTALL CENTRAL SWITCH AND ROUTER	LS	1	$35,000.00	$35,000.00
131	CCTV-010	CENTRAL FIBER TERMINATION	LS	1	$10,000.00	$10,000.00
132	CCTV-011	FURNISH AND INSTALL VIDEO DISPLAY AND CONTROL WORKSTATION	LS	1	$20,000.00	$20,000.00
133	CCTV-012	INTEGRATE, TEST, AND DOCUMENT	LS	1	$10,000.00	$10,000.00
		SUBTOTAL				$196,700.00
		CONSTRUCTION SUBTOTAL				$10,002,629.50
		10% CONTINGENCY				$1,000,262.95
		PROJECT MANAGEMENT, CONSTRUCTION ENGINEERING & INSPECTIONS				$1,500,394.43
		CONSTRUCTION TOTAL				**$12,503,286.88**

SECTION 4.0

FEE SUMMARY

4.1 FEE SCHEDULE

Effective July 1, 2011, prior to the issuance of any building permit for new residential development in the City of National City, a Transportation Development Impact Fee (TDIF) shall be paid based on the fee schedule shown in **Table 14a**. For the purpose of the TDIF, single-family dwelling units (DU) are classified based on a low residential density of 6 DU/Acre or less. Multi-family dwelling units are classified based on a medium to high residential density of greater than 6 DU/Acre.

The following fee schedule shown in **Table 14b** has been set for new non-residential development. Non-residential land uses are classified per 1,000 square feet of building area. The imposition of the TDIF upon non-residential development is currently under suspension per City Council Ordinance (refer to Chapter 4.52 of the National City Municipal Code for further discussion).

Table 14a – TDIF Schedule (Residential)

Land Use	Fee
Single-Family Residential	$2,209 per dwelling unit
Multi-Family Residential	$2,209 per dwelling unit

Table 14b – TDIF Schedule (Non-residential)

Land Use	Fee
Commercial	$2,704 per 1,000 square feet
Office/Services	$6,002 per 1,000 square feet
Industrial	$2,519 per 1,000 square feet

4.2 DEVELOPMENT FORECAST

Table 15 shows current and future development projects subject to the TDIF. Estimates for future development are based on current projects likely to apply for building permits during each fiscal year, historical averages, and market conditions.

Table 15 – Development Forecast

FY	Project	SF DU	MF DU
08/09 (current)	2921 Leonard St.	1	0
	Mirabella (Gretchen Way, Sabine Way)	7	0
	Paradise Village (Arcadia Pl. & E. 7th St.)	0	136
	Total:	**8**	**136**
09/10 (current)	Pacific View Estates (Makati St.)	9	0
	CDC (Harding Ave. & W. 15th St.)	3	0
	Hilltop View Estates (Harbison Ave. & E. 8th St.)	22	0
	Habitat for Humanity (G Ave. & E. 18th St.)	0	8
	2140 L Ave.	1	0
	916 E. 7th St.	1	0
	Total:	**36**	**8**
10/11 (current)	Pacific View Estates (Division St., Luzon Ct., Manila Way)	12	0
	Villa Paraiso Apts. (V Ave.)	0	5
	1933 Palm Ave.	1	0
	Total:	**13**	**5**
11/12 (current)	1941 Palm Ave.	1	0
	Centro (A Ave. & E. 12th St.)		61
	Pacific View Estates (Luzon Ct., Manila Way)	4	
	Total:	**5**	**61**
12/13 (current)	Pacific View Estates (Manila Way)	4	0
	Addison Park Apts. (Palm Ave.)	0	26
	345 Harbison Ave	1	0
	1207 E. 7th St.	1	0
	1727 Sweetwater Rd	1	0
	Total:	**7**	**26**
13/14 (estimate)	Revolution 2.0 (National City Blvd.)	0	157
	NC-8 (C Ave.)	0	8
	Total:	**0**	**165**
Notes: SF = Single-Family, MF = Multi-Family, DU = Dwelling Unit			

4.3 TDIF REVENUES

Table 16 summarizes TDIFs collected for past and current fiscal years, as well as estimated revenues based on the development forecasts shown in **Table 15**.

Table 16 – TDIF Revenues

FY	Land Use	Fee / DU	DU	Revenue
08/09 (current)	SF Residential	$2,000	8	$16,000
	MF Residential	$2,000	136	$272,000
				$288,000
09/10 (current)	SF Residential	$2,040	36	$73,440
	MF Residential	$2,040	8	$16,320
				$89,760
10/11 (current)	SF Residential	$2,081	13	$27,053
	MF Residential	$2,081	5	$10,405
				$37,458
11/12 (current)	SF Residential	$2,123	5	$10,615
	MF Residential	$2,123	61	$129,503
				$140,118
12/13 (current)	SF Residential	$2,165	7	$15,155
	MF Residential	$2,165	26	$17,320
				$38,970
13/14 (estimate)	SF Residential	$2,209	0	$0
	MF Residential	$2,209	165	$364,485
				$364,485

SECTION 5.0

PROGRAM ADMINISTRATION AND FEE REQUIREMENTS

5.1 FEE COLLECTION AND USE OF REVENUES

Commencing July 1, 2008, prior to the issuance of any building permit for residential development in the City of National City, a Transportation Development Impact Fee (TDIF) shall be paid based on the fee schedule provided in *Subsection 4.1*. The fee shall be paid before the issuance of building permits for each development project within the City of National City. No building permit shall be issued within the City of National City unless and until the TDIF has been paid in full. In the case of discretionary permits that will not involve a building permit, but which will involve new development, payment of the fee shall be recommended as a condition of permitting to the decision-making body that would approve such permit. A fee schedule has also been set through City Council Ordinance for non-residential development. However, based on the Ordinance the imposition of the TDIF upon non-residential development is currently under suspension (refer to Chapter 4.52 of the National City Municipal Code for further discussion).

The purpose of the fee is to defray the actual or estimated costs of constructing planned transportation facilities necessary to accommodate increased traffic generated by future development consistent with sections 66000 et seq. of the California Government Code (*Mitigation Fee Act*). Costs funded by the TDIF may include project administration and management, design and engineering, right-of-way acquisition, and construction. The TDIF collected shall fund transportation facilities, or portions thereof, identified in this report, that will provide increased road capacity necessitated by the cumulative impacts of future development. Further studies, including environmental review, may show superior alternative facilities that also provide the needed increased capacity. Once such studies are completed, fees collected may be used to fund those superior alternative facilities. The TDIF shall not be used to fund roadway maintenance activities or to correct existing deficiencies in the roadway network.

Types of improvements associated with the TDIF include:

- Roadway widening, roadway extension and turning lanes
- Traffic signal coordination and other traffic improvements
- Improvements to freeway-arterial interchanges
- Railroad grade separations
- Expanded regional express bus and rail transit service.

The revenue raised by payment of the TDIF shall be placed in a separate and special account or fund in a manner to avoid any commingling with other revenues and funds of the City of National City. TDIF revenues, along with any interest earnings on the account or fund, shall be used solely to:

1) Pay for the City's future construction of facilities described in this report, or to reimburse the City for those described or listed facilities constructed by the City with funds advanced by the City from other resources; or

2) Reimburse developers who have been required or permitted to install such listed facilities which are oversized with supplemental size, length, or capacity, relative to demand generated by the subject project; or

3) Pay costs associated with administration of the TDIF.

TDIF revenues shall also be applied towards improvements that expand capacity on the Regional Arterial System (RAS), as required by the TransNet Regional Transportation Congestion Improvement Program (RTCIP). Therefore, commencing July 1, 2008, $2,000 per new residential unit developed shall be collected and expended on the RAS improvement projects identified in this report, through the City of National City TIF Program. In addition, non-residential development fees collected pursuant to **Table 14b** (see *Subsection 4.1*), and after release of the suspension of the non-residential fees, will be expended on the RAS improvement projects also identified in this report. SANDAG will update the minimum fee requirements annually for cost inflation (see *Subsection 5.2* for further discussion on annual fee adjustments).

Revenues shall be spent within five years of receipt or have an expenditure plan that justifies keeping revenues for a longer period. The City of National City TIF Program report shall be updated annually to account for changes to the fee schedule, development forecasts, and facility improvement projects, including construction schedules, cost estimates and alternative funding sources. The TIF Program report, along with a separate financial report detailing fee revenues and expenditures, shall be submitted annually to the Independent Taxpayer Oversight Committee (ITOC) for review.

The TDIF fund, including accrued interest, shall be subject to the all of the applicable provisions of Government Code Section 66000 et seq., including but not limited to the requirements for accounting, reporting and expenditure of the fund for the improvements specified in this report.

5.2 ANNUAL FEE ADJUSMENTS

The TDIF may be adjusted annually starting July 1, 2009, and on each July 1st thereafter, based on the following factors:

1) The cost index used by SANDAG for the annual adjustment to the RTCIP impact fee

2) Changes in the type, size, location or cost of the transportation facilities, if any, to be financed by the TDIF, changes in land use designations in the City's General Plan, and upon other sound engineering, financing, and planning information.

Adjustments to the TDIF resulting from review of the factors above may be made by resolution amending the fee schedule and subject to compliance with the *Mitigation Fee Act*.

5.3 EXEMPTIONS

The following new development shall be exempt from paying the TDIF:

- Public facilities, government buildings, public buildings and public schools;
- Uses with the following characteristics or activities as a principal use of land, generally described as "community purpose facility":
    a. Social service activities, including such services as Boy Scouts, Girl Scouts, Boys Club and Girls Club, YMCA and services for the homeless,
    b. Private schools (elementary and secondary),
    c. Day care (nonprofit only),
    d. Senior care and recreation (nonprofit only), and
    e. Worship, spiritual growth and development;
- Condominium conversions;
- Moderate, low, very low, and extremely low income residential units as defined by Health and Safety Code Sections 50079.5, 50093, 50105, 50106, and referenced in Government Code Section 65585.1;
- Rehabilitation and/or reconstruction of any legal residential structure and/or the replacement of a previously existing residential unit;
- Development projects subject to development agreements prior to May 28, 2004 that expressly prohibit the imposition of impact fees, however, if the terms of the development agreement are extended beyond July 1, 2008, then the requirements of this Chapter shall apply;
- Guest dwellings;
- Additional residential units located on the same parcel regulated by the provisions of any agricultural zoning;
- Kennels and catteries established in conjunction with an existing residential unit;
- The sanctuary building of a church, mosque, synagogue, or other house of worship eligible for property tax exemption;
- Institutional units if the following findings are made and documented prior to the issuance of a final occupancy permit:
    a. The individual units will not have both a bathroom and permanent built-in kitchen facilities equipped with a cooking range, refrigerator, and sink; and,
    b. The principal reason a person will live in the unit is because the person needs medical and/or nursing care; and,
    c. The developer has agreed that the unit in substance will be used as a health care facility rather than as a residence.

5.4 REIMBURSEMENT AGREEMENTS

Whenever a developer of a development project would be required, as a condition of approval of a development permit, to construct or finance the construction of a portion of a transportation facility identified in this report, the City Council may impose an additional requirement that the developer install the improvements with supplemental size, length or capacity in order to ensure efficient and timely construction of the transportation facilities network. If such a requirement is imposed, the City Council shall, in its discretion, enter into a reimbursement agreement with the developer. The reimbursement agreement can be for either in the form of a cash payment or a credit against the fee otherwise levied on the development project, or some combination thereof. The determination of the form is at the sole discretion of the City.

The reimbursement amount shall not include the portion of the improvement needed to provide services or mitigate the need for the facility or the burdens created by the development. A developer shall not receive cash reimbursement from the appropriate TDIF fund until all developers who have previously executed reimbursement agreements payable from the same fund have been fully reimbursed or until such agreements have expired. The maximum term of any reimbursement agreement shall be twenty- five (25) years.

5.5 FEE WAIVERS, REDUCTIONS AND REFUND OF FEE

Refer to Chapter 4.52 of the National City Municipal Code for requirements and explanation of fee waivers, reductions and refund of fees.

ATTACHMENT A

RTCIP IMPACT FEE NEXUS STUDY